MODEL NMG-118-T4

OPERATION, SERVICE AND PARTS MANUAL

Address: 4075 East Market Street York, PA 17402-5100 USA
Telephone: 717-840-4500 Telefax: 717-840-4501
www.klingecorp.com

MANUFACTURED BY KLINGE CORPORATION

REVISION RECORD

Rev	Description	Date	Approved
A	Updated fuel consumption pg 5	6-28-2024	BES
B	Updated cover image and service parts	8-20-2024	BES
C	Added EPA statement, Sect 1.1; corrected Power Supply value, Sect 1.9	4-30-2025	BES
D	Added Power View Parameters and Trouble Codes Sect 5.2, added optional Accessories Box Sect 6	10-21-2025	BES
E	Added Spare Parts List, updated service parts section	7/29/2026	BES

Table of Contents

Service Request 4
Spare Parts Request 4
Use of this Manual 4
SECTION 1 SPECIFICATIONS 5
1.1 GENERAL 5
1.2 CONSTRUCTION 5
1.3 ENGINE 5
1.4 ALTERNATOR 5
1.5 TEMPERATURE OPERATING RANGE 5
1.6 WEIGHT 5
1.7 MOUNTING 5
1.8 FUEL SUPPLY 5
1.9 POWER SUPPLY 6
1.10 CONTROLS 6
1.11 ELECTRICAL STARTING SYSTEM 6
1.12 FUEL SYSTEM 6
1.13 LUBRICATION SYSTEM 6
1.14 COOLING SYSTEM 7
1.15 COMBUSTION AIR CLEANING SYSTEM 7
SECTION 2 SAFETY PRECAUTIONS 8
2.1 ROTATING HAZARDS 8
2.2 BATTERY HAZARDS 8
2.3 NOISE HAZARD 8
2.4 ELECTRICAL HAZARDS 8
2.5 GENERAL SAFETY PRECAUTIONS 9
2.6 SAFETY DO'S AND DON'TS 10
SECTION 3 GENERATOR SET OPERATION 11
3.1 PRE-START INSPECTION 11
3.2 STARTING THE UNIT 11
3.3 AFTER START CHECK-UP 11
3.4 SHUTTING OFF THE ENGINE 11
3.5 LED INDICATORS 12
3.6 ENGINE SPEED (RPM) 12
SECTION 4 MAINTENANCE AND COMPONENT INFORMATION 14
4.1 FUEL SYSTEM 14
4.2 COMBUSTION AIR INTAKE SYSTEM 14
4.3 LUBRICATION 14
4.4 COOLING SYSTEM 14
4.5 FAN BELT 15
4.6 BATTERY 15
4.7 STARTER AND BATTERY CHARGING ALTERNATOR 15
4.8 SERVICING SCHEDULE 16
4.9 PTI FORM 16
4.10 RECOMMENDED SPARE PARTS 17
SECTION 5 TROUBLESHOOTING 18
5.1 TROUBLE SHOOTING 18
5.2 POWER VIEW DISPLAY 21
SECTION 6 SERVICE PARTS 26

Service Request

Requests for Service should be directed to the Klinge Service Team. The below link should be used to place all requests for service and will afford the quickest response time.

https://klingecorp.com/request-service/

This form will help us determine model and age of the equipment, location, basic details about the issue, who to contact and how to best handle the issues with the equipment. A service ticket number will be provided in a response email once the form is received and processed. If the equipment is out of warranty, charges may apply for extensive technical support.

Additionally, our Service Department can be reached via email at technical@klingecorp.com.

Spare Parts Request

Requests for Spare Parts should be directed to our Parts Department via email at spares@klingecorp.com. Please have available at the time of the request the Serial Number of the equipment to ensure that the proper part is provided.

Use of this Manual

The use of this manual is intended for the safe operation of the equipment described. It is therefore reasoned that persons who have the occasion to use this manual have a knowledge of mechanical and electrical systems and components addressed by its' contents. However, efforts have been made to enable persons less familiar with these systems to use this manual.

The equipment may be installed in a number of configurations. Each may have optional items and differing external details provided by third parties. The specific electrical diagram is posted on the unit as decals.

Suggestions as to improvement in content and format are welcome and should be addressed to engineering@klingecorp.com. Corrections and improvements will be included on dated revisions – the latest of which will be available upon request.

SECTION 1 SPECIFICATIONS

1.1 GENERAL

The NMG-118-T4 (Nose Mount Generator Set) was specifically designed to meet the rigorous demands of ocean, over-the-road, and rail transport of 20' and 40' refrigerated containers. The NMG-118 can be mounted quickly in the nose of a container, using only four bolts.

The genset meets the EPA T4 regulations as confirmed via extensive testing by the engine manufacturer, Isuzu.

1.2 CONSTRUCTION

Welded aluminum frame
Aluminum doors and closures
Stainless steel hardware

1.3 ENGINE

ISUZU 4LE2 Tier 4/Stage 3B
Liquid cooled diesel, four cylinder; 2.2L; 4 stroke; OHV; direct injected; turbocharged; glow plug assisted Start.
30 kW (40.2 BHP) @ 1800 RPM rated output

1.4 ALTERNATOR

28.4 kW / 35.5 kVA RFL, specifically designed for starting 3 phase AC electrical motors.
Single bearing, 10 lead, 1800 RPM, Y 480 volts, 0.8 power factor lagging.
NOTE: The output voltage is not adjustable but is directly related to the engine's speed.
Normal readings at 1800 RPM (60 Hz) are between 460 and 500 V.

1.5 TEMPERATURE OPERATING RANGE

From -30°C to +50°C (-20°F to +125°F)

1.6 WEIGHT

- 500 kg (1100 lbs.) without fuel
- 685 kg (1510 lbs.) with full fuel tank

1.7 MOUNTING

Mounting clip in back, 4 bolts in front

1.8 FUEL SUPPLY

The generator set has an incorporated fuel tank with a capacity of 170 L (45 US gallons) that can provide approximately 22 hours of operation under full load.

1.9 POWER SUPPLY

STANDARD: 28 kVA - 460 V AC / 3 phase / 60 Hz
40 A power circuit breaker
CEE 17 - 32 A power receptacle

1.10 CONTROLS

- Two toggle switches
  - Start switch: OFF-ON-START
  - Engine speed switch: 1000 RPM-1800 RPM
- Isuzu Power View monitors:
  - ENG RPM
  - OIL PRESS
  - COOL TEMP
  - BAT VOLT
  - ENG TORQ
  - MACH HRS
  - FUEL TEMP
  - FUEL RATE
  - INT MFLD T
  - BOOST PRESS
  - SYS VOLT
  - BOST PRES2

1.11 ELECTRICAL STARTING SYSTEM

- Battery: 12V, Group 31 – 950 CCA @ 0°F
- Battery Charging Alternator: 20 or 35 A, 14 VDC
- Starter Motor: 2.0 kW, 12V Gear Reduction type
- Glow plug assisted start with control resistor

1.12 FUEL SYSTEM

- Pre-Fuel Filter w/Water Sedimenter, paper element type w/drain, remote mount
- Pre-Pump, electrical 12 V fuel supply pump, remote mount
- Main Fuel Filter w/Water Sedimenter paper element type with priming pump, w/drain, remote mount
- Engine integrated fuel pump
- Direct injection cylinders

1.13 LUBRICATION SYSTEM

- Full pressure system with trochoid type Oil Pump, driven from the crankshaft.
- Oil pan made out pressed stamped steel, full sump, with a capacity of 8.4 liter (8.9 U.S. quarts).
- Full flow, spin-on Oil Filter, replaceable paper element type.

1.14 COOLING SYSTEM

- Pressurized liquid (50/50 water / glycol mixture) forced circulation by Centrifugal Pump.
- Thermostat, wax pellet type, opening at76.5°C (170°F).
- Cooling fan suction type, plastic 6 blades, 400mm (15.75”) diameter
- Heavy duty 4 row, 3 pass copper / brass Radiator.
- High coolant temperature switch, normal open, single pole, closing at105°C (221°F).

1.15 COMBUSTION AIR CLEANING SYSTEM

- One high performance single stage Cyclopac® air filter with extended life dry cartridge and automatic dust and water expelling Vacuator™ Valve.
- Air cleaner restriction indicator for maximum filter life.

SECTION 2 SAFETY PRECAUTIONS

Safety Glasses should be worn at all times when operating or servicing the Generator Set.

2.1 ROTATING HAZARDS

1. Keep your hands, clothing, and tools clear of the alternator belt when the generator set is running.

2. If it is necessary to run the generator with a removed cover, be very careful with tools or meters being used in that area to avoid contacting the rotor.

2.2 BATTERY HAZARDS

Few people realize just how dangerous a battery can be.

The electrolyte in a lead acid battery is dilute sulfuric acid (H_2SO_4). During charge or discharge functions of a battery, a chemical change takes place within the individual cells that cause the bubbling we see through the filler hole. This gas bubbling is hydrogen and oxygen, and it is **EXPLOSIVE**. If during this gassing action, a means of ignition is present, an explosion could occur. A defective battery may suddenly explode even while standing idle. Added to this danger, consider a fall-out of highly corrosive sulfuric acid caused by the explosion.

PRECAUTIONS

1. Always wear eye protection when servicing batteries. If electrolyte is splashed on the skin or in the eyes, flush immediately under running water. Obtain medical help as soon as possible.
2. When charging batteries, do not remove the vent caps.
3. When disconnecting or reconnecting the generator set battery make sure the ON/OFF switch is in the **OFF** position to prevent an arc, which could cause the battery to explode. Disconnect the ground cable first, preferably at a point away from the battery. Reconnect the ground cable last, again away from the battery if possible.
4. **DO NOT** check a battery by "**sparking**" across the posts. Eye injury from the arc or explosion may occur.

2.3 NOISE HAZARD

When servicing or operating the Generator Set in a running condition, personal protective hearing equipment should be worn when exposure is longer than 8 hours.

2.4 ELECTRICAL HAZARDS

HIGH VOLTAGE

When servicing or repairing a generator set, the possibility of serious or even fatal injury from electrical shock exists. Extreme care must be used when working with an operating generator. Lethal voltage potentials can exist on connections that are in the exciter control box.

Special attention should be given to the Main Power Plug and Receptacle when disconnecting from each other. When disconnecting these two items ensure that the power circuit breaker has been turned to the off position. Do not pull at the cable but rather with a firm grip on the housing, grab the plug and receptacle and pull apart. If the cable is used rather than the housing the risk

exists that the wires within the housing could become dislodged and lead to a future electrical hazard.

PRECAUTIONS

1. When working on high voltage circuits on the generator sets, **DO NOT** make any rapid moves. If a tool drops, **DO NOT** grab for it. People do not contact high voltage wires on purpose. It occurs from an unplanned movement.

2. Make sure of your footing. If you slip, you will instinctively grab for support. This can be lethal around a generator set. Work on rubber mats or dry wood if possible.

3. Use tools with insulated handles that are in good condition. Never hold metal tools in your hand if exposed energized conductors are within reach.

4. Treat all wires and connections as high voltage until a meter and wiring diagram show otherwise.

IMMEDIATE ACTION must be initiated after a person has received an electrical shock. Obtain expert medical assistance if available.
Immediately remove the source of shock by either shutting it down or removing the victim from the source. If it is not possible to shut off the generator set, the wire should be cut with an insulated tool (e.g. a wooden handled axe or cable cutters with heavy insulated handles), or a rescuer wearing insulated gloves. Whichever method is used, **DO NOT** look at the wire while it is being cut. The ensuing flash can cause blindness. Remember that insulated gloves **MUST BE** insulated and not just rubber gloves manufactured for protection from liquids. If the victim has to be removed from live circuitry, pull him off with a non-conductible material. Use his coat, a rope, a piece of dry wood or loop your belt around his leg or arm and pull him off. **DO NOT TOUCH THE PERSON**, you could receive a shock from current flowing through his body. After separating the victim from the power source, check immediately for respiration and presence of pulse. If a pulse is present, respiration might be restored by mouth-to-mouth resuscitation.

LOW VOLTAGE

Control circuits utilized by the generator set are low voltage (12 VDC). This voltage potential is not considered dangerous, but the large amount of current available (over 300 amps) can cause severe burns if shorted to ground.
1. Disconnect the negative terminal of the battery if possible when working on the generator set. Disconnect the cable end that is away from the battery.
2. **DO NOT** wear jewelry, watches, or rings. These items can short out and cause severe burns to the wearer.

2.5 GENERAL SAFETY PRECAUTIONS

1. To prevent against a possible personnel burn injury the following precautions should be followed:
    a. Do not touch the muffler, exhaust pipe or exhaust manifold while the unit is in operation or immediately after stopping the unit. The unit should be allowed to cool to an acceptable level prior to performing service in these areas.
    b. Do not touch the radiator cap or attempt to add coolant to the engine while the unit is in operation or immediately after stopping the unit. The unit should be allowed

to cool to an acceptable level prior to opening the radiator cap.

2. Use extreme caution if holes are drilled into the generator set. Holes drilled into an electrical wire can cause fire, explosion, or shock hazard.
3. Ensure all mounting screws are tight and are the correct length.
4. Keep tools and equipment clean and in good working condition. Accidents occur when you attempt procedures without the proper tools.

2.6 SAFETY DO'S AND DON'TS

DON'T -

DON'T allow inexperienced personnel to work on the generator or electrical equipment.

DON'T remove guards or protective devices.

DON'T wear loose clothing or jewelry in the vicinity of moving parts. These can get in machinery, with disastrous results.

DON'T wear jewelry while working on electrical equipment. If your hair is long, wear a head covering. Hair caught in a drill press, fan belt or other moving part can cause serious injury.

DON'T stand on a wet floor while working on electrical equipment. Use rubber insulated mats placed on dry wood platforms.

DON'T lunge after a dropped tool. To do so may place you in a position of extreme danger.

DON'T commence any operation until you have taken all the necessary steps to ensure that you are in complete safety.

DO -

DO perform your tasks carefully, without undue haste.

DO provide fire extinguishers (rated ABC).

DO provide a First Aid Kit (for burns and abrasions). Obtain medical attention, if necessary.

DO use the correct tools for the job you are doing.

DO make sure that all fasteners are secure.

DO use extreme care while making adjustments on the generator set while it is running.

DO keep your hands away from moving parts.

DO remember - Horseplay is for horses! It has no place around machinery.

DO disconnect batteries before starting work on the generator set.

DO use screwdrivers, pliers, diagonal pliers, etc. with insulated handles.

DO remember to keep one hand in your pocket if it is necessary to work on "**live**" circuits. To do so will prevent passage of electricity into one hand and out the other, which passes current across the heart.

DO PRACTICE SAFETY. THE LIFE YOU SAVE MIGHT BE YOUR OWN

SECTION 3 GENERATOR SET OPERATION

3.1 PRE-START INSPECTION

1. Check fuel level - Use Diesel fuel SAE No. 2-D, No. 1-D in cold weather, or any other equivalent low sulphur content diesel fuel as DIN EN 590; BS 2869 Class A-1; JIS No.2; NATO Code F-54 / F-34 / F-44 and XF-63.
2. Check engine oil level – should be at full mark
   Use SAE multi-grade oil 10W-40 API rating CC/CD or higher for normal operation and SAE 5W-20 when operating at temperatures below -4ºF (-20ºC).
3. Check coolant level – should be between the two marks on the overflow bottle.
4. Check fan belt for tension and integrity.
5. Make sure that the generator's main circuit breaker located in the window of the genset left-hand door is in "OFF" position (right).
6. Ensure the refrigeration unit plug is connected to the generator set power receptacle.

3.2 STARTING THE UNIT

1. Ensure the Engine Speed Switch is set to 1000 RPM.
2. Move the OFF-ON START switch to ON, when the PREHEAT LED goes out (will not illuminate in warmer ambient conditions) toggle the switch to START. Release the switch when the engine has started.
3. Allow the engine to run for a minimum of 10 seconds to become stable at 1000 RPM.
4. Change engine speed switch to 1800 RPM.

3.3 AFTER START CHECK-UP

Look for the following in the Power View window:
- ENG RPM = 1800 ±5
- BAT VOLT = 12.8 VDC or greater
- OIL PRESS = 2 BAR or higher

When the above conditions are met it is safe to switch the main circuit breaker to ON.

There are several safety devices employed to prevent damage to the engine, or the electrical system, should a potentially dangerous situation occur.
The 25 A circuit breaker protects DC components and wiring from a short circuit situation. The circuit breaker will reset periodically until the short circuit is removed.
WHEN A DC CIRCUIT BREAKER IS REPLACED IT MUST BE INSTALLED PROPERLY WITH THE "BAT" TERMINAL CONNECTED TO THE LINE OR BATTERY SIDE OF THE CIRCUIT AND THE "AUX" TERMINAL CONNECTED TO THE LOAD SIDE OF THE CIRCUIT AS INDICATED ON THE CIRCUIT BREAKER.

Two safety shutdown devices are used to protect the engine. One is the high temperature switch that actuates at 221°F (105°C). The other is an oil pressure switch that actuates at 14 psi (1kg/cm^2).

3.4 SHUTTING OFF THE ENGINE

Switch the engine speed to 1000 RPM and allow to run for 3 minutes before switching the start switch to OFF. This will give time for the turbo to cool, extending the life of the turbo/engine.

3.5 LED INDICATORS

The electrical control system is provided with a high intensity red LED located on the upper front of the control box.
This red LED indicates when it is safe to start the engine, based on the temperature following the system's use of glow plugs in low ambient temperature conditions.

3.6 ENGINE SPEED (RPM)

The engine must be set to run at 1000 RPM at start-up.
After allowing the engine to run for 10 seconds to warm up the turbo, the engine speed switch is to be set to 1800 RPM before a load is put on genset.

WIRING DIAGRAM

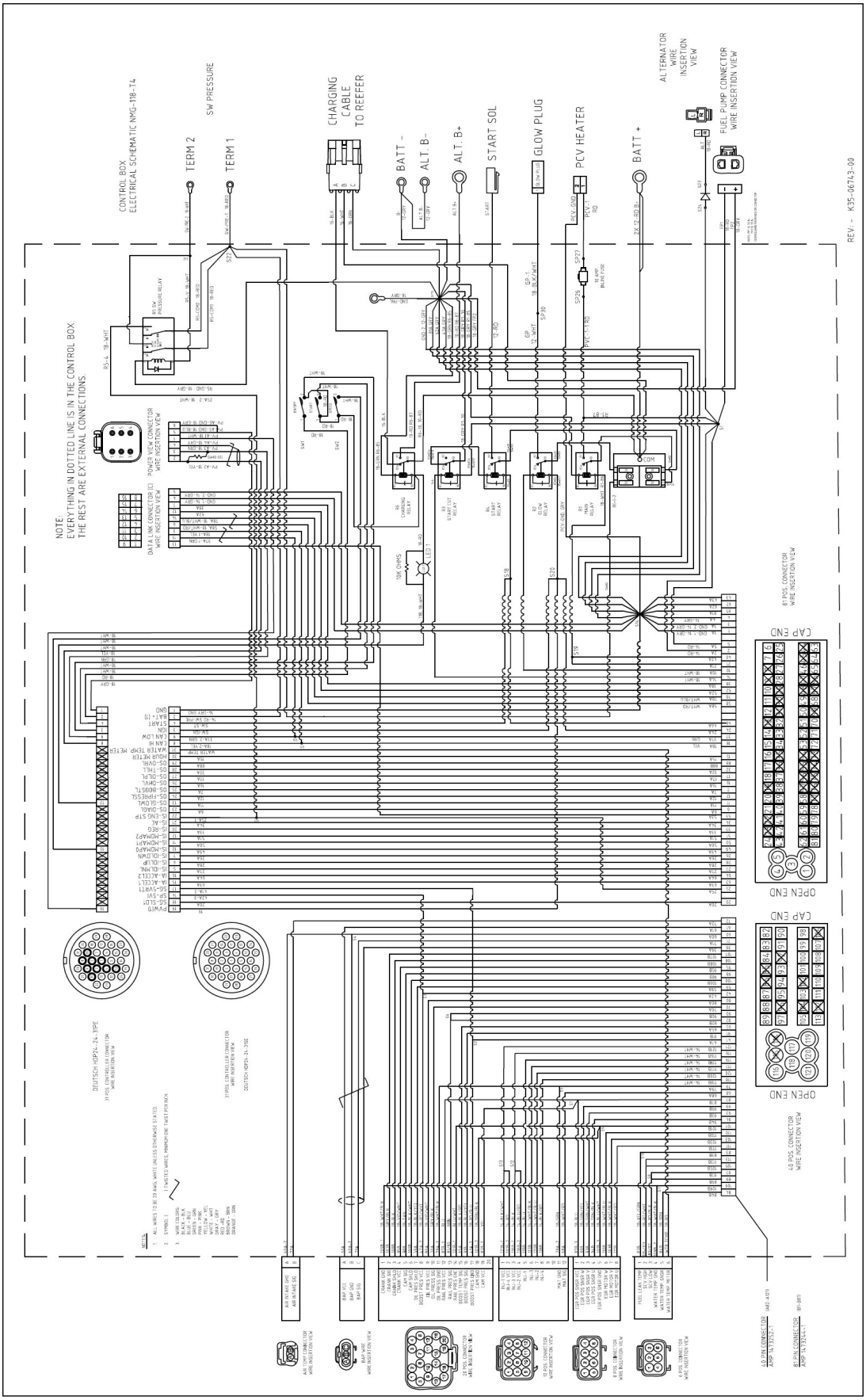

SECTION 4 MAINTENANCE AND COMPONENT INFORMATION

4.1 FUEL SYSTEM

The fuel injection pumps and fuel injection nozzles are precisely manufactured and therefore using fuel which contains water or dust particles will result in equipment seizure, costly damages and decreased engine output.
Replace fuel filter element after every 500 hrs of operation.
Use KLINGE K26-25310-08 pre-filter element and K26-25310-09 main filter element.
Before starting the unit check for leaks and for water in the filter bowl. Drain if necessary.
Use SAE No.2-D Diesel fuel, 1-D in cold weather.
The following standards are also approved: DIN EN 590; BS 2869 Class A-1; JIS No.2; NATO Code F-54 / F-34 / F-44 and XF-63.
DO NOT USE:

- Diesel fuel that has been contaminated with engine oil, this can cause engine damage and can also affect emission control.
- Fuel additives, except "Biocide" type, if required.

4.2 COMBUSTION AIR INTAKE SYSTEM

Engine performance and life depends on the intake air condition.
Replace air filter cartridge after every 500 hours of operation.
Use KLINGE K26 25091 08 filter cartridge.
After 100 hours of operation, or more often if the generator set is operated in a dusty environment, remove the filter cartridge and blow air at a pressure of 3 – 6 BAR (45 –70 PSI) only from the inside, to remove the dust.
Take care to not damage the filter element during the cleaning and to not cause air leakage (sucking) when the air cleaner is reassembled.

4.3 LUBRICATION

A correct oil and filter service will ensure good performance and a long engine life.
Change oil and filter after initial 50 hours of operation.
Afterwards change the oil every 250 hours and filter every 500 hours of operation or at least once in a year.
Use SAE multi-grade oil SAE 10W-40 API rating Cj-4 or higher and SAE 5W-20 when operating at temperatures below -20°C (-4°F).
Use KLINGE XB-998209 filter element.
Check the oil level before every start, add oil if required, up to the FULL mark.
CAUTION: Never mix up different brand or different type of oils.

4.4 COOLING SYSTEM

Use 50/50 Ethylene Glycol / Water solution. Never exceed 60 / 40 antifreeze water mix.
NOTE: Concentrations over 65% Ethylene Glycol adversely affect freeze protection, heat transfer rates and silicate stability that may cause water pump leakage.
Replace coolant every two years.
Check the hoses and pump for leaks and the coolant level, before every trip of the unit. With a cool engine the liquid level should be between the two marks on the expansion tank.

4.5 FAN BELT

Check the fan belt for tension and integrity before every start.
Replace if necessary, using KLINGE K26 25310-20 belt.

4.6 BATTERY

Keep the battery fully charged all the time, it is important especially in cold seasons.
Keep the battery posts clean and the battery cables tightened securely.
Always disconnect the battery negative cable when work on the unit is performed.
If distillated water is needed to be added, do it before the unit will be operated, otherwise the water will not mix with the acid and can freeze in cold weather.

4.7 STARTER AND BATTERY CHARGING ALTERNATOR

The starter and the battery charging alternator servicing consists of:

- Check the carbon brushes and the brush contact.
- Clean the alternator slip ring.

Avoid spraying water or steam on the alternator and on the starter, it may cause damage.

4.8 SERVICING SCHEDULE

	Daily or Weekly	Initial 50 Hours	Every 250 Hours	Every 500 Hours	Every 1000 Hours	Every 2000 Hours
GENERATOR SET (NMG-118)						
Check Fuel Level / add if needed	X					
Check sediment bowl on fuel filter (Drain water and clean if needed)		X	X			
Replace Fuel Filter				X		
Replace Air Filter Insert (More frequent may be required based on operating area)				X		
Check Oil Level / add if needed	X					
Replace Oil Filer		X		X (Min Yearly)		
Replace Oil		X	X (Min Yearly)			
Check for fluid leaks	X	X				
Check radiator coolant level/ add if needed	X					
Inspect and if needed clean radiator fins			X			
Flush radiator and replace coolant and hoses						X
Inspect and adjust cooling fan V-belt		X	X			
Replace V-belt						X
Inspect and clean Vacuator valve (Air Filter)			X			
Check engine for unusual noises or exhaust smoke	X		X			
Ensure battery terminals are tight			X			
Check main circuit breaker plastic boot			X			
Inspect unit and generator set for damaged, loose, or broken parts, missing bolts			X			
Check condition of mounting bolts		X	X			
Check condition of engine and alternator mounts (replace if necessary)		X			X	

- In addition to the above checklist the normal Pre-Trip Inspection Form should also be completed every 2 months.

4.9 PTI FORM

It is important that a Pre-Trip Inspection (PTI) be completed prior to each shipment.

The NMG-118-T4 PTI form can be found on Klinge's website at:
http://www.klingecorp.com/pti/

4.10 RECOMMENDED SPARE PARTS

ITEM	PART #	DESCRIPTION	U / M	QTY
1	K26-25310-21	Oil Filter	EA	2
2	K26-25310-19	Fuel Filter Main Element	EA	1
3	K26-25310-18	Fuel Filter Pre Element	EA	1
4	K26-25091-08	Air Filter	EA	1
5	K26-25145-112	V-Belt Cooling Fan / Alternator	EA	1
6	K28-10785-01	Boot Main Circuit Breaker	EA	1
7	K24-22559-00	Relay 12 V 10A SPDT	EA	1
8	K24-22121-00	Relay 12 VDC 30A SPDT	EA	1
9	K24-22556-00	Switch OFF / ON / START	EA	1
10	K24-22416-00	Switch ON / OFF (RPM Switch)	EA	1
11	K26-25310-03	Fuel Pump	EA	1
12	060-18893-00	Hose Radiator – Inlet	EA	1
13	060-18894-00	Hose Radiator – Outlet	EA	1
14	K24-17239-00	Boot Toggle Switch	EA	1

SECTION 5 TROUBLESHOOTING

5.1 TROUBLE SHOOTING

The following trouble shooting chart is by no means complete, but covers the more general type problems, which would most likely occur if a breakdown is experienced.

POSSIBLE CAUSE	CORRECTIVE ACTION SUGGESTED
Problem: Engine starter will not energize	
Loose or corroded battery terminals	Clean terminals and tighten
Battery voltage too low	Recharge or replace battery
Faulty START / PREHEAT switch	Replace
Faulty ON / OFF switch	Replace
Faulty starter solenoid	Replace
Faulty starter motor	Replace
Circuit breaker open	Replace if it does not reset
Problem: Starter turns but engine does not ignite	
Faulty control relay R1	Replace
Faulty emergency stop timer	Replace
Faulty engine fuel solenoid	Replace
Control rack is stuck in stop position	Remedy
Engine too hot and protection system will not allow to operate	Allow engine to cool
Faulty coolant temperature switch	Replace switch
Faulty electrical fuel pump	Replace
No fuel	Add fuel to tank
Clogged fuel filter element	Replace

POSSIBLE CAUSE	CORRECTIVE ACTION SUGGESTED
Problem: Engine starts but stalls immediately	
Air in the fuel system	Remedy and bleed the system
Defective oil pressure switch Low oil pressure LED stays ON	Replace switch
Oil level to low	Add oil
Problem: Engine stops with high engine temperature indication	
Coolant temperature too high	Check cooler for air flow restriction and clean or remove restriction
Coolant level too low	Add coolant
Defective high temperature switch	Replace switch
Thermostat malfunction	Replace
Fan belt slippage or broken	Remedy or replace
Problem: Black exhaust	
Clogged air filter	Clean the filter cartridge or replace
Improper fuel – low cetane grade	Replace fuel
Nozzle damage	Repair or replace nozzle
Problem: White smoke	
Water mixed in fuel	Replace fuel and clean fuel filter
Low compression pressure	Check compression
Low coolant temperature	Check thermostat and replace if needed
Problem: Unstable engine running (Hunting)	
Defective governor spring	Replace
Incorrect valve adjustment	Adjust valve clearance

POSSIBLE CAUSE	CORRECTIVE ACTION SUGGESTED
Problem: No voltage at power receptacle but AC voltmeter needle is in the green band	
Main circuit breaker is on OFF position	Turn main circuit breaker ON
Defective main circuit breaker	Replace
Problem: No AC voltage	
No residual magnetism in the alternator exciter field	Restore magnetism by flashing field
Open in main stator windings	Check for continuity in windings
* Open or short in rotating diodes	Check rotating diodes and replace if needed
* Open in alternator field	Check for continuity. If field coils are open, replace the rotor or repair it.
* Shorted exciter armature	Check for short and replace if faulty. Use a Kelvin type bridge to measure this resistance
* Shorted leads between exciter armature and generator field	Test and repair
NOTE: * Designated rotating parts. The rear alternator cover (bearing carrier) must be removed in order to perform the test. For instructions how to perform the tests see "ALTERNATOR MANUAL" at the end of this Manual.	
Problem: Low voltage	
Low speed	Check engine speed or system for overload.
Excess load	Reduce load. The load on each leg should be as evenly balanced as possible and should not exceed the rated current on any leg.
High resistance connections – Connections will be warm or hot	Make better connections, electrically and mechanically.
Shorted field	Test field coils for possible short. Use an Ohmmeter or resistance bridge. Repair or replace rotor if alternator field coils are shorted.

POSSIBLE CAUSE	CORRECTIVE ACTION SUGGESTED
Problem: Fluctuating voltage	
Irregular engine speed	Check engine for malfunction.
Loose terminal or load connections	Make better connections.
Defective bearing causing uneven gap	Replace alternator bearing.
Problem: Overheating	
Generator overloaded	Reduce load. Check with ammeter and compare with alternator nameplate rating.
Unbalanced load	The load on each leg should be as evenly balanced as possible and should not exceed the rated current on each leg.
Dry bearing	Replace bearing
Clogged vent ducts	Clean air passages

5.2 POWER VIEW DISPLAY

SUPPORTED PARAMETER NUMBERS (SPN)
The following Parameters are supported and would be displayed if a fault occurs.

SPN	Description
22	Extended Crankcase Blow-by Pressure
51	Throttle Valve 1 Position
52	Intercooler Temperature
92	Engine % Load at Current RPM
94	Fuel Delivery Pressure
96	Fuel Level 1
98	Engine Oil Level
100	Engine Oil Pressure
101	Crankcase Pressure
102	Intake Manifold 1 Pressure

105	Intake Manifold 1 Temperature
106	Air Inlet Pressure
107	Air Filter 1 Differential Pressure
108	Barometric Pressure
109	Engine Coolant Pressure 1
110	Engine Coolant Temperature
111	Engine Coolant Level 1
157	Fuel Injector Metering Rail 1 Pressure
167	Charging System Voltage
168	Battery Potential Voltage
172	Air Inlet Temperature
173	Exhaust Temperature
174	Fuel 1 Temperature
175	Engine Oil Temperature
177	Transmission Oil Temperature
182	Trip Fuel
183	Fuel Rate
184	Instantaneous Fuel Economy
185	Average Fuel Economy
190	Engine Speed (RPM)
247	Engine Hours
441	Aux Temperature 1
513	Actual Engine % Torque
515	Engine Desired Operating Speed (RPM)
701	Aux I/O 1
975	Engine Fan 1 Estimated Speed

1387	Aux Press 1
1436	Engine Ignition Timing
1761	SCR Catalyst Tank Level 1 (DEF)
3031	DEF Tank Temperature
3242	DPF Intake Temperature
3246	DPF Outlet Temperature
3517	SCR Catalyst Tank Level 2 (DEF)
3697	Diesel Particular Filter (DPF) Lamp Status
3698	Exhaust System High Temp Lamp
3700	DPF Active Regeneration Status
3702	DPF Active Regeneration Inhibited
3719	DPF Soot Load %
3720	DPF Ash Load %
5078	Amber Warning Lamp Status
5079	Red Stop Lamp Status
5080	Malfunction Lamp Status
5082	Oil Pressure Low Lamp
5083	Coolant Temperature High Lamp
5245	Diesel Exhaust Fluid Low Level
5246	SCR Operator Inducement
6709	Speed High Lamp

DATA TROUBLE CODE (DTC)

- Fault codes will be displayed on a dedicated faults page sorted by SPN and FMI code (see image below) **The viewer does not shut the engine down** on fault condition, all shutdowns will be generated by the engine ECM.

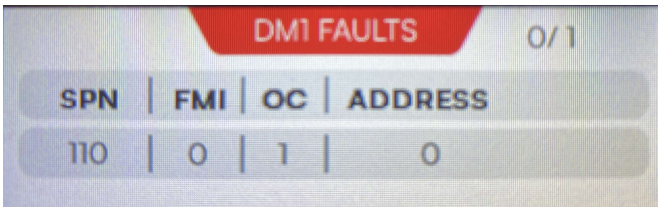

- SPN = Suspect Parameter Number - Indicates what part of the system is reporting an error. See Supported Parameters section for a partial list of SPN definitions. Contact equipment manufacturer for a full list.
- FMI = Failure Mode Indicator - Indicates the reported failure. See table below.
- OC = Occurrence Count - how often the failure occurred.
- Address - The source address (SA) of the device reporting the failure. For the NMG-118 T4, SA 0 is the only applicable address, originated by the engine ECU.

FMI	Description
0	Above Normal - Most Severe Level
1	Below Normal - Most Severe Level
2	Data Erratic or Incorrect
3	Voltage Above Normal or Shorted High
4	Voltage Below Normal or Shorted Low
5	Current Below Normal or Open Circuit
6	Current Above Normal or Shorted
7	Mechanical System not Responding or Out of Calibration
8	Abnormal Frequency or PWM Rate
9	Abnormal Update Rate
10	Abnormal Rate of Change
11	Problem Unknown
12	Bad ECM, Controller, or Smart Sensor
13	Out of Calibration
14	Special Instructions
15	Above Normal - Least Severe Level
16	Above Normal - Moderately Severe Level
17	Below Normal - Least Severe Level
18	Below Normal - Moderately Severe Level
19	CAN Data Error
20	Data Drifted High

21	Data Drifted Low
22 - 30	Reserved for Future Use
31	Condition Exists

SECTION 6 SERVICE PARTS

LIST OF CONTENTS

Unit Genset NMG-Tier 4 Isuzu Engine/RFL Alternator 18 kW	**26**
Engine / Alternator Assembly Tier 4	**35**
Box Control	**42**
Alternator RFL-30 Modified	**44**
Box Accessories Power Alarm & GSM Complete (Optional)	**45**

DRAWING NO. 460-18902-00

DO NOT SCALE

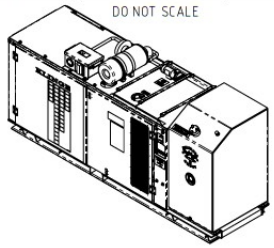

REV	DATE	DESCRIPTION	CHANGE NO	DRAWN	APPROVED
E	20230612	ITEM #56 QTY WAS 9, ITEM #60 QTY WAS 15, ITEM #73 QTY WAS 1, ITEM #74 QTY WAS 15, ITEM #85 QTY WAS 4, ITEM #103 QTY WAS 12, ADDED ITEMS #112 THRU #118, ADDED NOTE #2, UPDATED FUEL LINE HOSE LENGTHS SHEET 7	23-167	DBG	BES
F	20240111	REMOVED ITEM #108 (360-18978-00), ITEM #109 WAS K21-15649-04 SHEET 7	23-191	DBG	BES
G	20250610	ADDED ITEM #108 2 PLACES SEE SHEETS 6 & 8	25-154	DBG	BES
H	20250721	MOVED ITEM #108 (DATA LABELS) LOCATIONS SEE SHEETS 3 AND 8, ADDED NOTE #3	25-108	DBG	BES

ITEM NO	PART NO	DESCRIPTION	QTY	ITEM NO	PART NO	DESCRIPTION	QTY	ITEM NO	PART NO	DESCRIPTION	QTY
118	K21-16548-09	CLAMP CS VINYL COATED 0.812" ID 3/4" WIDE	2	78	K21-50226-30	SCREW, HEX, SS, FULL THREAD, M10 X 1.5 X 30	18	38	060-18894-00	HOSE RADIATOR OUTLET NMG TIER 4	1
117	K21-15797-04	WASHER LOCK EXT INT SS #10	1	77	K21-16547-12	WASHER, FLAT, STAINLESS STEEL, M12 X 37 X 3	8	37	060-14473-00	HOLDER RADIATOR OUTLET HOSE NMG-115-10	1
116	K21-16523-03	SCREW HEX SS M5 X 0.80 X 10 LONG 18-8 FULL THREAD	1	76	K21-16583-12	NUT LOCK SS M12 X 1.75 NYLON INSERT	4	36	360-14506-02	CABLE BATTERY NEGATIVE BLACK BOOT 41 INCH LG	1
115	K21-16548-29	CLAMP CS VINYL COATED 1.75" ID 1.00" WIDE	1	75	K21-50227-80	SCREW HEX SS M12 X 1.75 X 80 18-8 PARTIAL THREAD	4	35	360-14506-01	CABLE BATTERY POSITIVE RED BOOT 41 INCH LG	1
114	K21-18505-06	WASHER, FLAT, STAINLESS STEEL, M6 X 14.3 X 1.27	1	74	K21-50401-10	WASHER, FLAT, STAINLESS STEEL, M10 X 20 X 2	18	34	XB-993011-02	RUBBER PAD - BATTERY 3.0W x 12.0in LG	2
113	K21-50226-20	SCREW HEX SS M10 X 1.5 X 20 LONG 18-8 FULL THREAD	2	73	K21-50226-25	SCREW, HEX, SS, FULL THREAD, M10 X 1.5 X 25	2	33	XB-993011-22	RUBBER NEOPRENE 3/16" X 2.0" X 8.5"	1
112	K21-50421-05	WASHER LOCK SPG SS M5 X 9.2 X 1.2 THK	1	72	K21-14072-00	WASHER FLAT STAINLESS STEEL 5/16 X 0.88 X 18-8	2	32	K25-25912-00	BATTERY, 12 VOLT, TOP STUDS WITH NUTS	1
111	K26-25310-03	FUEL LOW PRESSURE PUMP ISUZU NMG TIER-4	1	71	060-14493-00	BRACKET SS BATTERY HOLD-DOWN	1	31	360-18911-01	BRACKET FUEL MAIN FILTER PAINTED	1
110	K26-24666-00	INDICATOR AIR RESTRICTION 20" H20	1	70	K21-14921-07	NUT, LOCK, STAINLESS STEEL, 5/16 - 18	2	30			1
109	K21-15649-08	CLAMP CUSH SS 3/4 IN ID .28 MOUNTING HOLE	2	69	XB-209049	ROD BATTERY HOLD DOWN NMG-115-10	2	29			
108	K35-06598-01	LABEL ATEX MARKING AND DATA PLATE	2	68	K21-50421-08	WASHER, LOCK, SPRING, SS, M8 X 15.4 X 2	40	28	360-18922-00	BOX CONTROL ASSEMBLY	1
107	360-18970-00	BOX BREAKER (TOP MOUNT)	1	67	K21-50401-08	WASHER, FLAT, STAINLESS STEEL, M8 X 17 X 1.4-1.8	4	27	XB-993000-18	RUBBER NEOPRENE 1/8" X 1.0" X 4.0"	2
106	K23-13427-14	FITTING 90 DEG 3/8 HOSE 14mm BANJO	1	66	K21-50225-25	SCREW HEX SS M8 X 1.25 X 25 LONG 18-8 FULL THREAD	15	26	XB-205126	BRACKET ASSEMBLY RADIATOR HOLD-DOWN	1
105	K21-16686-10	CLAMP OETIKER SS DOUBLE PINCH (15-18MM)	8	65	K21-16245-00	WASHER FLAT SS #8	1	25	XB-993011-03	RUBBER 3/16 X 3.0 X 9.0	2
104	K23-07981-00	CLAMP HOSE SS 1.81 TO 2.75 DIA. RANGE	4	64	K21-14921-02	NUT LOCK SS NO 8-32 18-8	1	24	XB-340015	RADIATOR 4 ROW / 3 PASS NMG ISUZU ENG	1
103	K28-10804-06	HOSE NEOPRENE PUSH LOCK BLACK (QTY IN FT)	9.9	63	XB-991434-10	SCR FLAT SS #8-32 X 1-1/4 PHIL 18-8	1	23	360-18855-00	SHROUD FAN ASSEMBLY TIER 4 NMG	1
102	K29-18490-00	HOOK STRAP SS 0.125 DIA. WIRE	6	62	K21-50401-06	WASHER, FLAT, STAINLESS STEEL, M6 X 12 X 1.4-1.8	8	22	060-18854-01	POST RADIATOR FRONT PAINTED NMG T4	1
101	K28-10691-00	STRAP 15" LG NO HOOKS	3	61	K21-16526-30	STUD FLUSH M6 X 1.0 X 30MM LG	2	21	060-18853-01	ANGLE RADIATOR TOP SUPPORT PAINTED	1
100	K28-10797-00	GROMMET .875 x1.25 x.1875	1	60	K21-50421-10	WASHER, LOCK, SPRING, SS, M10 X 18.4 X 2.5	18	20	360-18850-01	POST REAR RADIATOR PAINTED NMG TIER-4	1
99	K26-25095-04	HOOD AIR INLET PLASTIC STYLE E FITS 2.50 OD FLTER	1	59	K21-18510-08	WASH INSUL PVC M8 25.4/8.4MM OD/ID 0.02 IN 0.51MM	66	19	360-11014-00	CLIP RETAINING	1
98	K28-11155-00	HOSE ADAPTER PCV VENT TUBE	1	58	K21-50225-30	SCREW HEX SS M8 X 1.25 X 30 18-8 FULL THREAD	39	18	060-18943-01	RETAINER POWER CABLE PAINTED	2
97	K28-11154-00	ELBOW 90 DEG 1.50" - 2.00" I.D. SILICONE	1	57	K21-16638-25	SCR FLAT SS M8-1.25 X 25 LG	7	17	060-18849-01	ANGLE DIAGONAL SUPPORT TOP PLATE PAINTED	1
96	K28-11156-00	ELBOW 90 DEG 2.00" - 2.25" I.D.	1	56	K21-50421-06	WASHER, LOCK, SPRING, SS, M6 X 12.2 X 1.5	10	16	360-18847-01	POST ASSEMBLY FRAME REAR PAINTED	1
95	K26-24667-00	BAND AIR CLEANER MTG 6.5 ID	2	55	K21-50224-20	SCREW, HEX, SS, FULL THREAD, M6 X 1.00 X 20	14	15	060-18846-01	POST FRAME REAR PAINTED NMG TIER 4	1
94	K26-25091-00	FILTER AIR 1 STAGE 2-1/2 IN - 2-1/4 OUT	1	54	K21-18510-06	WASH INSUL PVC M6 19.6/6.2MM OD/ID 0.51MM THICK	31	14	360-18844-01	ANGLE TOP REAR PAINTED NMG TIER-4	1
93	360-18925-01	AIR INTAKE ASSEMBLY PAINTED NMG TIER 4	1	53	K21-16547-08	WASHER FLAT SS M8 LARGE OD 24MM 18-8 2MM THICK	72	13	360-18842-01	ANGLE TOP FRONT PAINTED NMG TIER-4	1
92	K21-16684-00	CLAMP DUAL LINE 5/8" TO 3/4" OD	1	52				12	360-18840-01	PANEL CONTROL ASSEM PAINTED NMG TIER 4	1
91	K21-50226-40	SCREW, HEX, SS, FULL THREAD, M10 X 1.5 X 40	2	51	K21-16583-08	NUT LOCK SS M8 X 1.25 NYLON INSERT	22	11	360-18838-00	PANEL ALTERNATOR END WELDED & PAINTED WHITE	1
90	K28-11147-00	FITTING 90-DEG BARB 3/8 HOSE 9/16-18 FEMALE	2	50	K21-16231-00	CLAMP HOSE SS 0.75 - 1.50 INCH	2	10	K29-17880-01	HINGE SLIP SS 9/32 HOLES SOCK LT HAND	2
89	K21-15649-15	CLAMP CUSH SS 32mm=1.25 ID	1	49	K21-50224-18	SCREW, HEX, SS, FULL THREAD, M6 X 1.00 X 18	8	9	360-18890-00	PANEL TOP ASSEMBLY	1
88	K21-15649-03	CLAMP CUSHIONED STAINLESS STEEL 1/2 INCH	2	48	K21-16583-06	NUT LOCK SS M6 X 1 NYLON INSERT	17	8	360-18908-00	DOOR ASSEMBLY RIGHT NMG TIER 4	1
87	K21-10189-00	WASHER FLAT STAINLESS STEEL 1/4 X 0.28 X 0.63	6	47	K21-16547-06	WASHER, FLAT, STAINLESS STEEL, M6 X 18 X 1.6	29	7	360-18888-00	DOOR LEFT END ASSEMBLY NMG TIER-4	1
86	K21-14642-00	SCREW HEX SS 1/4-20 X 1/2 LG	6	46	K29-17879-01	HINGE SLIP SS 9/32 HOLES SOCKET	2	6	360-18885-00	PANEL ASSEMBLY REAR NMG TIER-4	1
85	K21-50103-06	NUT HEX SS M6 X 1	5	45	XB-995029	SLEEVING FIBERGLASS 1.5ID 1000 F	32	5	XB-999076	ISOLATOR ENGINE NEOPRENE 260 LB AXIAL 130 LB LOAD	4
84	K21-50224-25	SCREW, HEX, SS, FULL THREAD, M6 X 1.00 X 25	2	44	K21-12930-00	CLAMP HOSE SS 1.06" TO 2"	2	4	360-18814-02	CRADLE RFL ALTERNATOR BLACK	1
83	K21-16528-30	BOLT CARR SS M8 x 1.25 x 30	1	43	360-18895-10	EXHAUST ASSEMBLY PAINTED NMG TIER 4	1	3	360-18892-00	ENGINE ALTERNATOR ASSEMBLY TIER 4	1
82	060-09113-00	INSULATOR HINGE	4	42	K23-10280-00	CLAMP HOSE (.38 - .63) 5/16 WIDE SS	2	2	360-18874-00	TANK ASSEMBLY FUEL NMG-TIER 4	1
81	K21-18510-10	WASH INSUL PVC M10 31.8/10.3MM OD/ID 0.02 IN 0.51MM	8	41	K21-18426-02	CLAMP HOSE SS 1.25 TO 2.125 DIA. RANGE	5	1	360-18836-01	FRAME ASSEMBLED WELDED NMG PAINTED	1

NOTES:
1. USE ANTI-SEIZE KLINGE P/N K13-02069-00 ON ALL STAINLESS STEEL FASTENERS
2. SEE WI #157 FOR CONTROL BOX ENGINE HARNESS CONNECTIONS, AND TO SECURE HARNESS
3. FOR ITEM #108 (DATA LABELS) LOCATION SEE SHEETS 3 AND 8

ALL PROPRIETARY RIGHTS IN THE SUBJECT MATTER HEREOF ARE RESERVED, AND NO PERMISSION IS GRANTED TO RE-PRODUCE THIS PRINT, IN WHOLE OR IN PART, OR DISCLOSE ANY OF THE INFORMATION UPON IT TO OTHERS WITHOUT WRITTEN RELEASE BY KLINGE CORP.

MATERIAL
NUMBER N/A
DESCR N/A
SIZE N/A

DIMENSIONS ARE MM [INCHES]
TOLERANCES (UNLESS OTHERWISE INDICATED)
LINEAR
X. = +/- 1.0 [OR +/- .040]
X.X = +/- 0.5 [+/- .020]
ANGULAR
X = +/- 2°
X.X = +/- 0.5°

KLINGE

	NAME	DATE
DRAWN	NWB	20221011
APPROVED	BES	20221017

KLINGE CORPORATION
4075 EAST MARKET STREET, YORK, PA 17402 USA

TITLE: UNIT GENSET NMG-TIER 4 ISUZU ENGINE/RFL ALTERNATOR 18 KW

CAGE/DCCM: 0K0L1
DRAWING NO.: 460-18902-00
REV: H
SCALE N/A
SHEET 1 OF 9
SHEET SIZE A2

460-18902-00

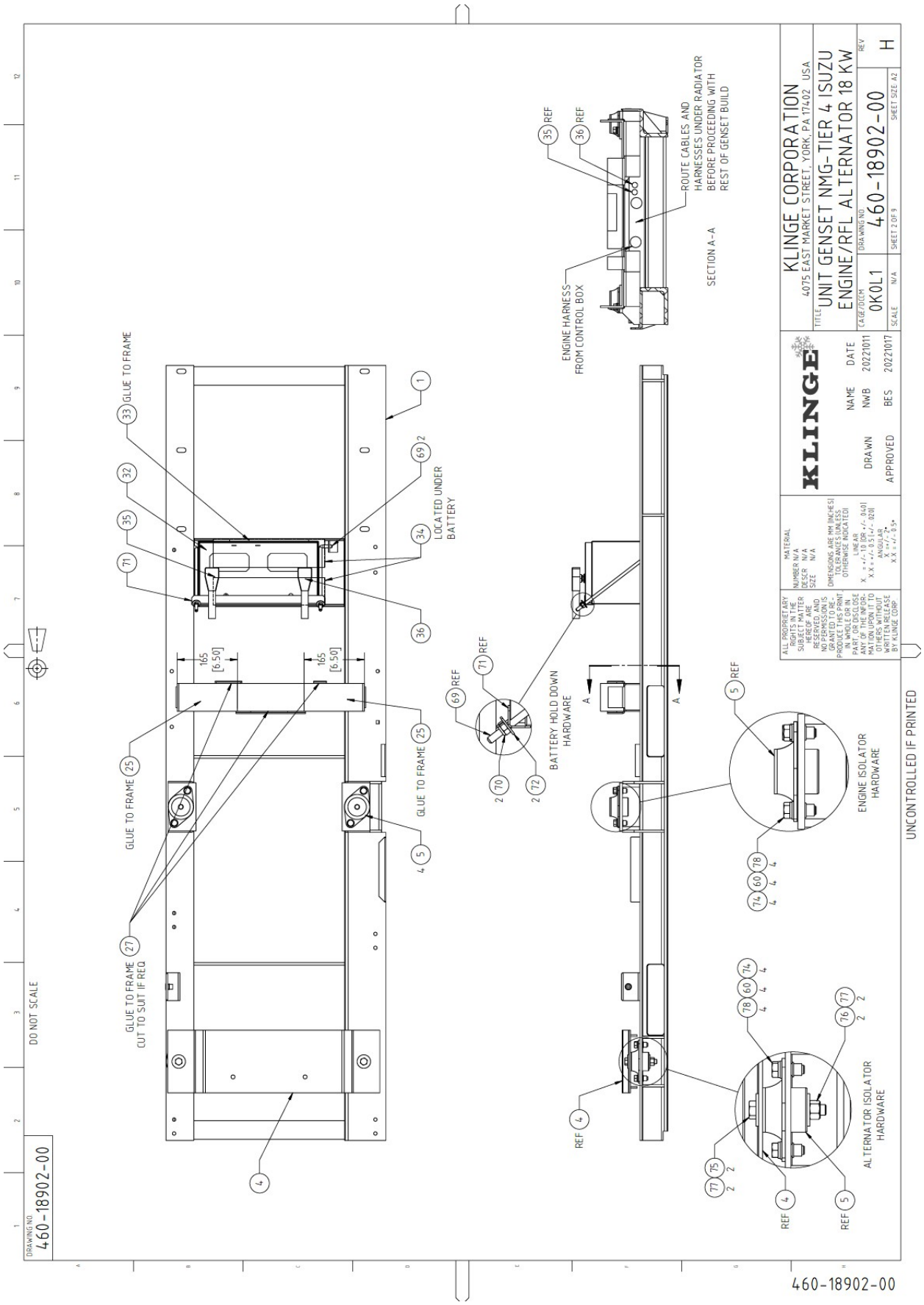
KLINGE CORPORATION
4075 EAST MARKET STREET, YORK, PA 17402 USA
UNIT GENSET NMG-TIER 4 ISUZU
ENGINE/RFL ALTERNATOR 18 KW
460-18902-00
H
SHEET 2 OF 9
SHEET SIZE A2
SCALE N/A
CAGE CODE 0K0L1
DRAWING NO 460-18902-00
KLINGE
DRAWN NWB 20221011
APPROVED BES 20221017
ALL PROPRIETARY RIGHTS IN THE SUBJECT MATTER HEREOF ARE RESERVED, AND NO PERMISSION IS GRANTED TO RE-PRODUCE THIS PRINT IN WHOLE OR IN PART, OR DISCLOSE ANY OF THE INFORMATION CONTAINED TO OTHERS WITHOUT WRITTEN RELEASE BY KLINGE CORP
NUMBER N/A
DESCR N/A
SIZE N/A
MATERIAL
DIMENSIONS ARE MM [INCHES] TOLERANCES UNLESS OTHERWISE INDICATED
LINEAR
X = +/- .10 [X +/- .040]
XX = +/- 0.1 +/- .020
ANGULAR
X = +/- 2°
XX = +/- 0.5°
ROUTE CABLES AND HARNESSES UNDER RADIATOR BEFORE PROCEEDING WITH REST OF GENSET BUILD
ENGINE HARNESS FROM CONTROL BOX
SECTION A-A
GLUE TO FRAME
LOCATED UNDER BATTERY
GLUE TO FRAME
GLUE TO FRAME
GLUE TO FRAME CUT TO SUIT IF REQ
165 [6.50]
165 [6.50]
BATTERY HOLD DOWN HARDWARE
ENGINE ISOLATOR HARDWARE
ALTERNATOR ISOLATOR HARDWARE
DO NOT SCALE
UNCONTROLLED IF PRINTED
DRAWING NO 460-18902-00
460-18902-00

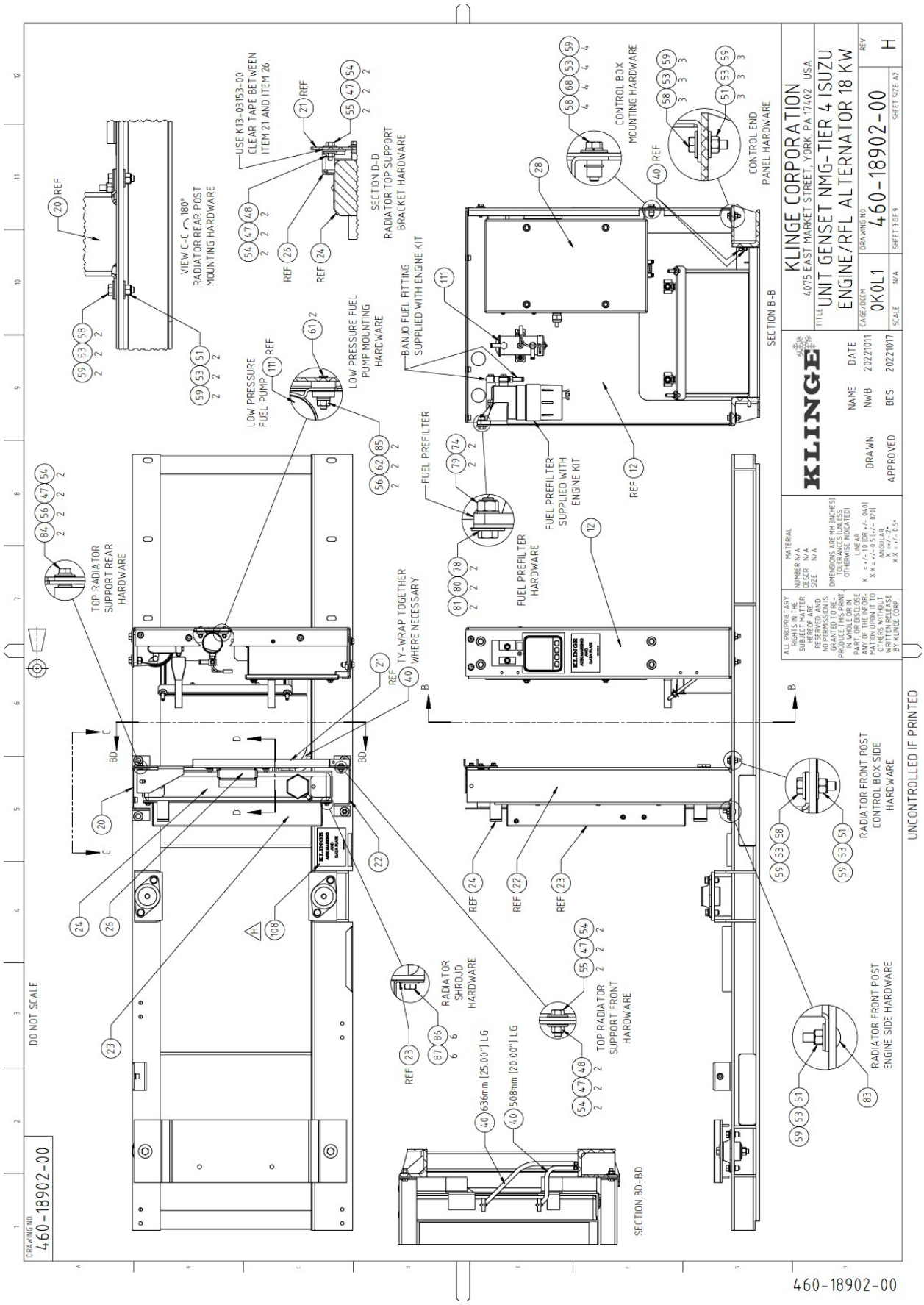
KLINGE CORPORATION
4075 EAST MARKET STREET, YORK, PA 17402 USA
UNIT GENSET NMG-TIER 4 ISUZU
ENGINE/RFL ALTERNATOR 18 KW
460-18902-00
H
SHEET 3 OF 9
SHEET SIZE A2
CAGE/DOCM 0K0L1
SCALE N/A
DRAWN NWB 20221011
APPROVED BES 20221017
DO NOT SCALE
UNCONTROLLED IF PRINTED
VIEW C-C 180° RADIATOR REAR POST MOUNTING HARDWARE
USE K13-03153-00 CLEAR TAPE BETWEEN ITEM 21 AND ITEM 26
SECTION D-D RADIATOR TOP SUPPORT BRACKET HARDWARE
CONTROL BOX MOUNTING HARDWARE
CONTROL END PANEL HARDWARE
SECTION B-B
BANJO FUEL FITTING SUPPLIED WITH ENGINE KIT
LOW PRESSURE FUEL PUMP MOUNTING HARDWARE
LOW PRESSURE FUEL PUMP
FUEL PREFILTER
FUEL PREFILTER SUPPLIED WITH ENGINE KIT
FUEL PREFILTER HARDWARE
TOP RADIATOR SUPPORT REAR HARDWARE
TY-WRAP TOGETHER WHERE NECESSARY
RADIATOR SHROUD HARDWARE
TOP RADIATOR SUPPORT FRONT HARDWARE
636mm [25.00"] LG
508mm [20.00"] LG
SECTION BD-BD
RADIATOR FRONT POST CONTROL BOX SIDE HARDWARE
RADIATOR FRONT POST ENGINE SIDE HARDWARE
460-18902-00

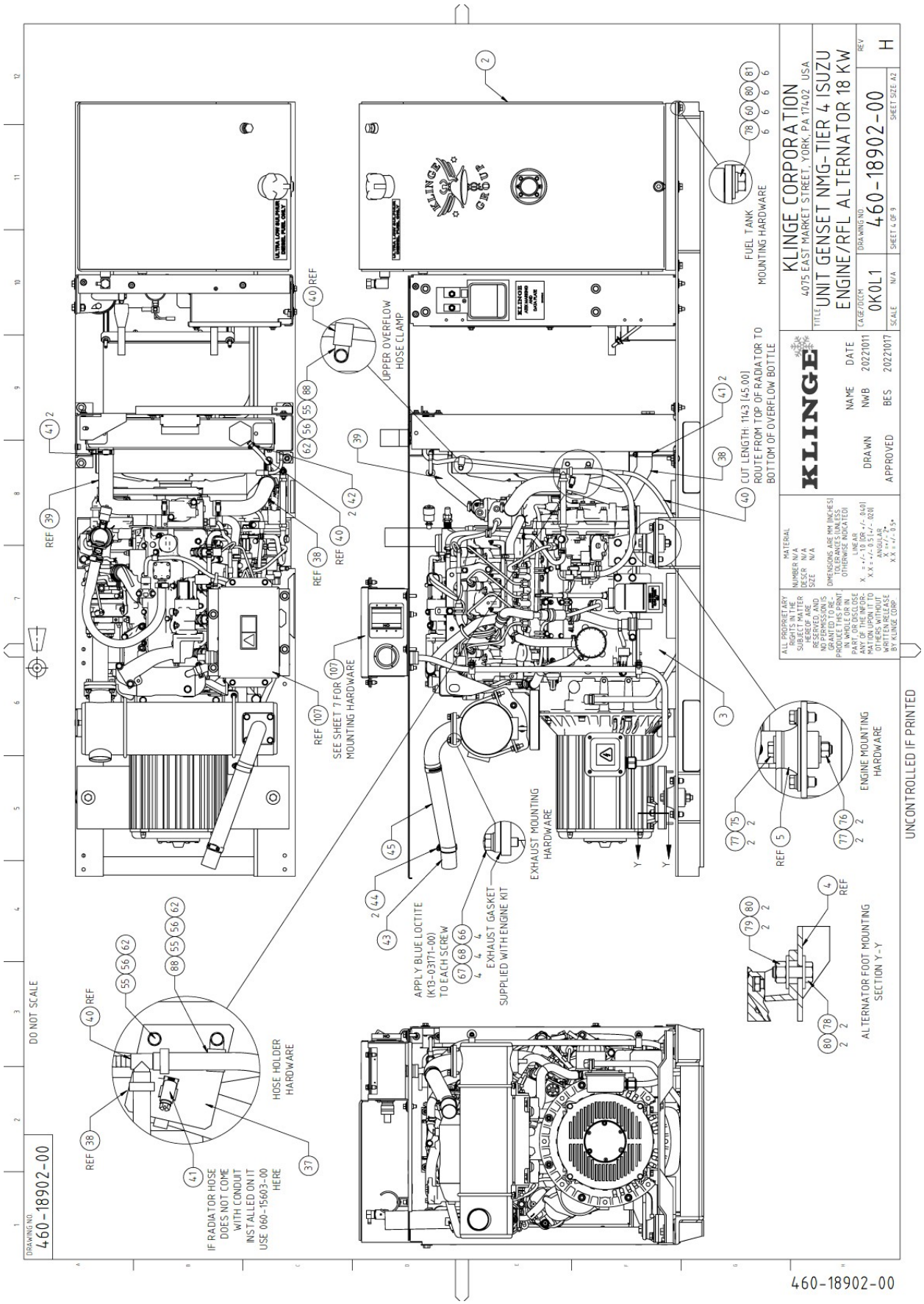
KLINGE CORPORATION
4075 EAST MARKET STREET, YORK PA 17402 USA
UNIT GENSET NMG-TIER 4 ISUZU
ENGINE/RFL ALTERNATOR 18 KW
460-18902-00
H
SHEET SIZE A2
SHEET 4 OF 9
0K0L1
N/A
KLINGE
DRAWN NWB 20221011
APPROVED BES 20221017
FUEL TANK MOUNTING HARDWARE
UPPER OVERFLOW HOSE CLAMP
CUT LENGTH: 1143 [45.00] ROUTE FROM TOP OF RADIATOR TO BOTTOM OF OVERFLOW BOTTLE
SEE SHEET 7 FOR MOUNTING HARDWARE
EXHAUST MOUNTING HARDWARE
APPLY BLUE LOCTITE (K13-03171-00) TO EACH SCREW
EXHAUST GASKET SUPPLIED WITH ENGINE KIT
ENGINE MOUNTING HARDWARE
ALTERNATOR FOOT MOUNTING SECTION Y-Y
HOSE HOLDER HARDWARE
IF RADIATOR HOSE DOES NOT COME WITH CONDUIT INSTALLED ON IT USE 060-15603-00 HERE
DO NOT SCALE
UNCONTROLLED IF PRINTED
460-18902-00

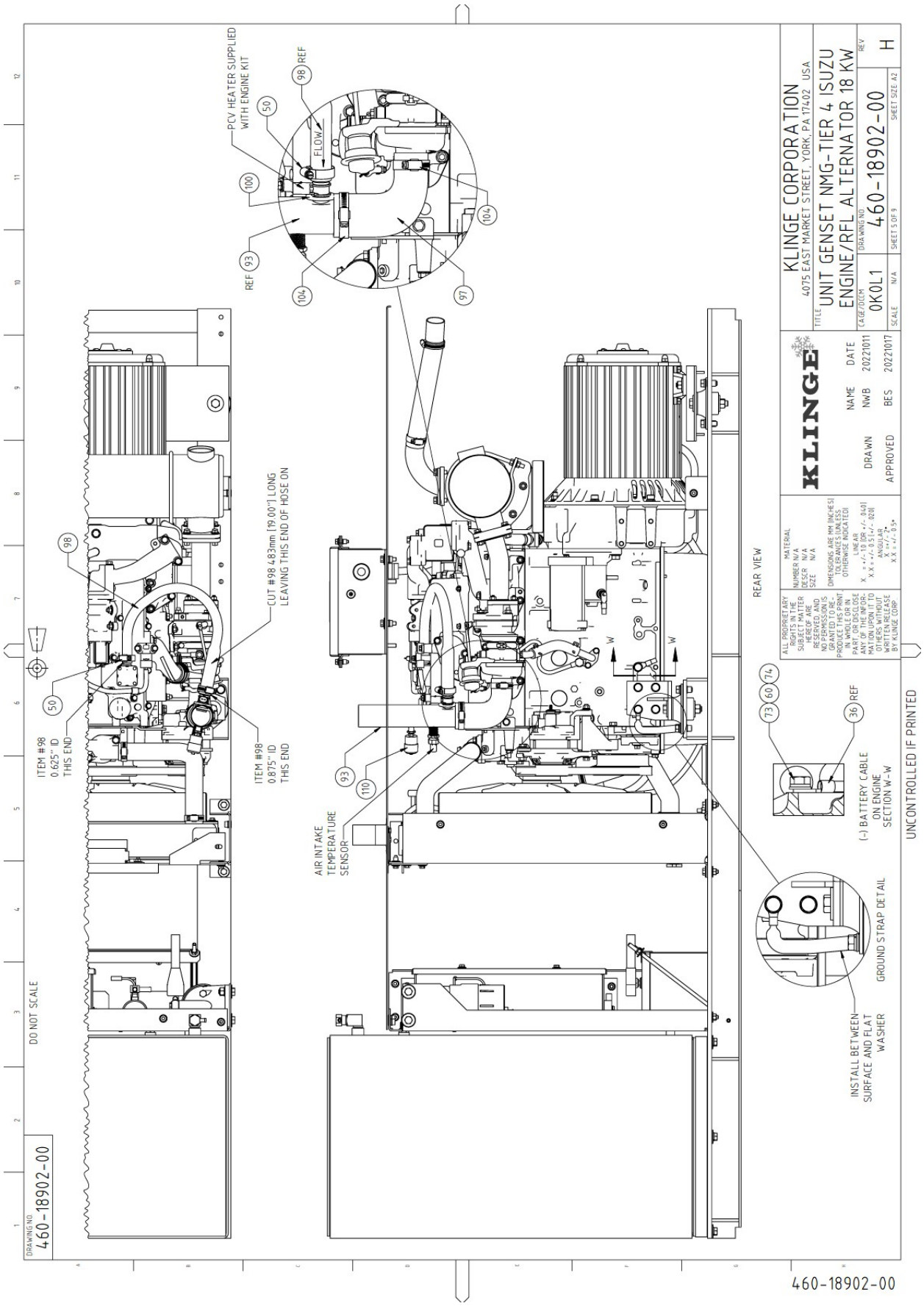
PCV HEATER SUPPLIED WITH ENGINE KIT
98 REF
50
FLOW
100
104
REF 93
104
97
98
CUT #98 483mm [19.00"] LONG LEAVING THIS END OF HOSE ON
50
ITEM #98 0.625" ID THIS END
ITEM #98 0.875" ID THIS END
93
110
AIR INTAKE TEMPERATURE SENSOR
W
W
REAR VIEW
73 60 74
36 REF
(-) BATTERY CABLE ON ENGINE SECTION W-W
GROUND STRAP DETAIL
INSTALL BETWEEN SURFACE AND FLAT WASHER
DO NOT SCALE
UNCONTROLLED IF PRINTED
DRAWING NO 460-18902-00
KLINGE CORPORATION
4075 EAST MARKET STREET, YORK, PA 17402 USA
TITLE UNIT GENSET NMG-TIER 4 ISUZU ENGINE/RFL ALTERNATOR 18 KW
REV H
CAGE CODE 0K0L1
DRAWING NO 460-18902-00
SCALE N/A
SHEET 5 OF 9
SHEET SIZE A2
KLINGE
DRAWN NWB 20221011
APPROVED BES 20221017
MATERIAL
NUMBER N/A
DESCR N/A
SIZE N/A
DIMENSIONS ARE MM [INCHES] TOLERANCES UNLESS OTHERWISE INDICATED
LINEAR
X = +/- 10 [X +/- .040]
XX = +/- 0.5 [+/- .020]
ANGULAR
X +/- 2°
XX +/- 0.5°
ALL PROPRIETARY RIGHTS IN THE SUBJECT MATTER HEREOF ARE RESERVED, AND NO PERMISSION IS GRANTED TO REPRODUCE THIS PRINT IN WHOLE OR IN PART, OR DISCLOSE ANY OF THE INFORMATION CONTAINED TO OTHERS WITHOUT WRITTEN RELEASE BY KLINGE CORP
460-18902-00

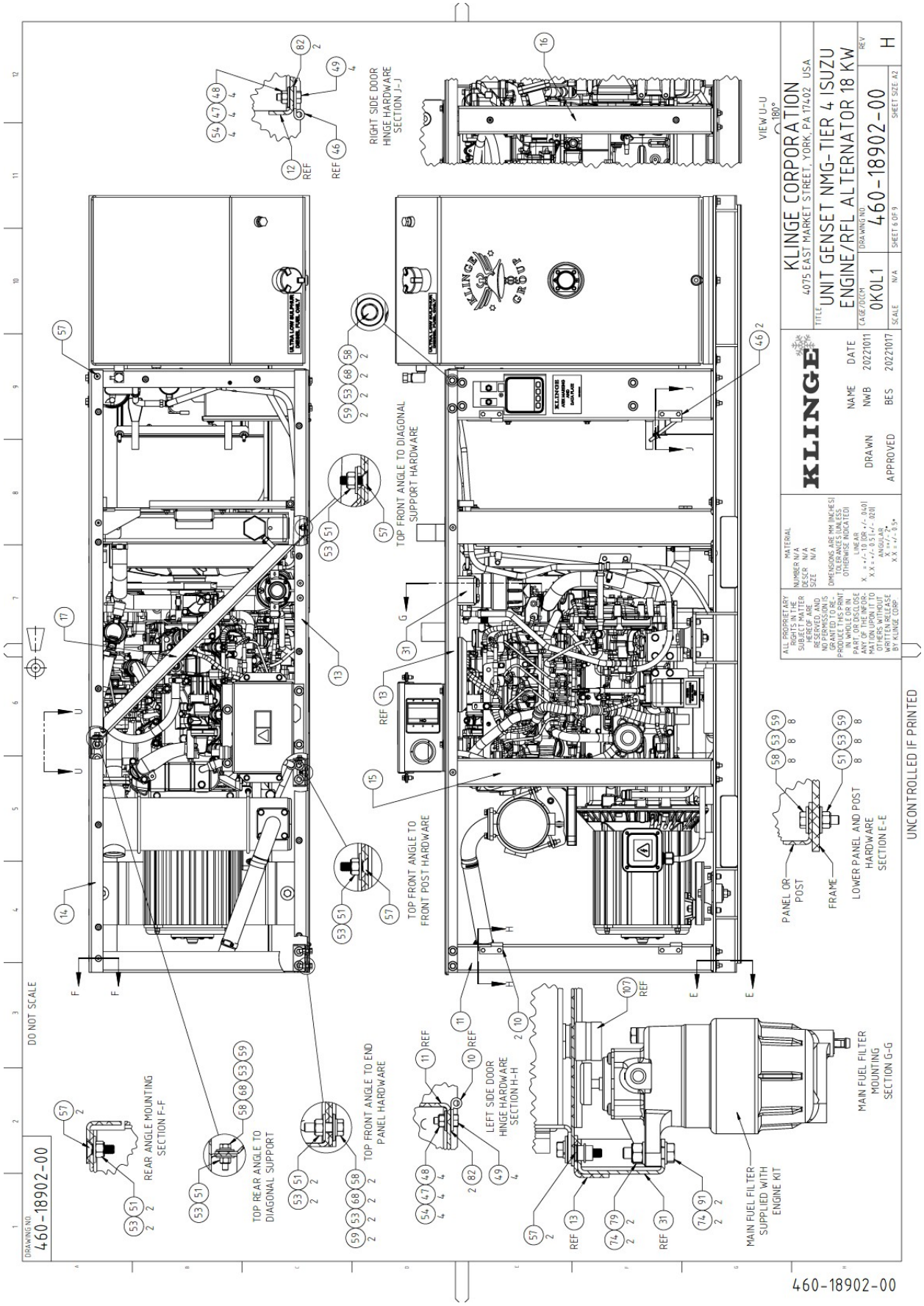
KLINGE CORPORATION
4075 EAST MARKET STREET, YORK, PA 17402 USA
UNIT GENSET NMG-TIER 4 ISUZU
ENGINE/RFL ALTERNATOR 18 KW
460-18902-00
H
KLINGE
DRAWN NWB 20221011
APPROVED BES 20221017
DO NOT SCALE
UNCONTROLLED IF PRINTED
RIGHT SIDE DOOR HINGE HARDWARE SECTION J-J
VIEW U-U
TOP FRONT ANGLE TO DIAGONAL SUPPORT HARDWARE
TOP FRONT ANGLE TO FRONT POST HARDWARE
REAR ANGLE MOUNTING SECTION F-F
TOP REAR ANGLE TO DIAGONAL SUPPORT
TOP FRONT ANGLE TO END PANEL HARDWARE
LEFT SIDE DOOR HINGE HARDWARE SECTION H-H
MAIN FUEL FILTER MOUNTING SECTION G-G
MAIN FUEL FILTER SUPPLIED WITH ENGINE KIT
LOWER PANEL AND POST HARDWARE SECTION E-E
PANEL OR POST
FRAME
460-18902-00

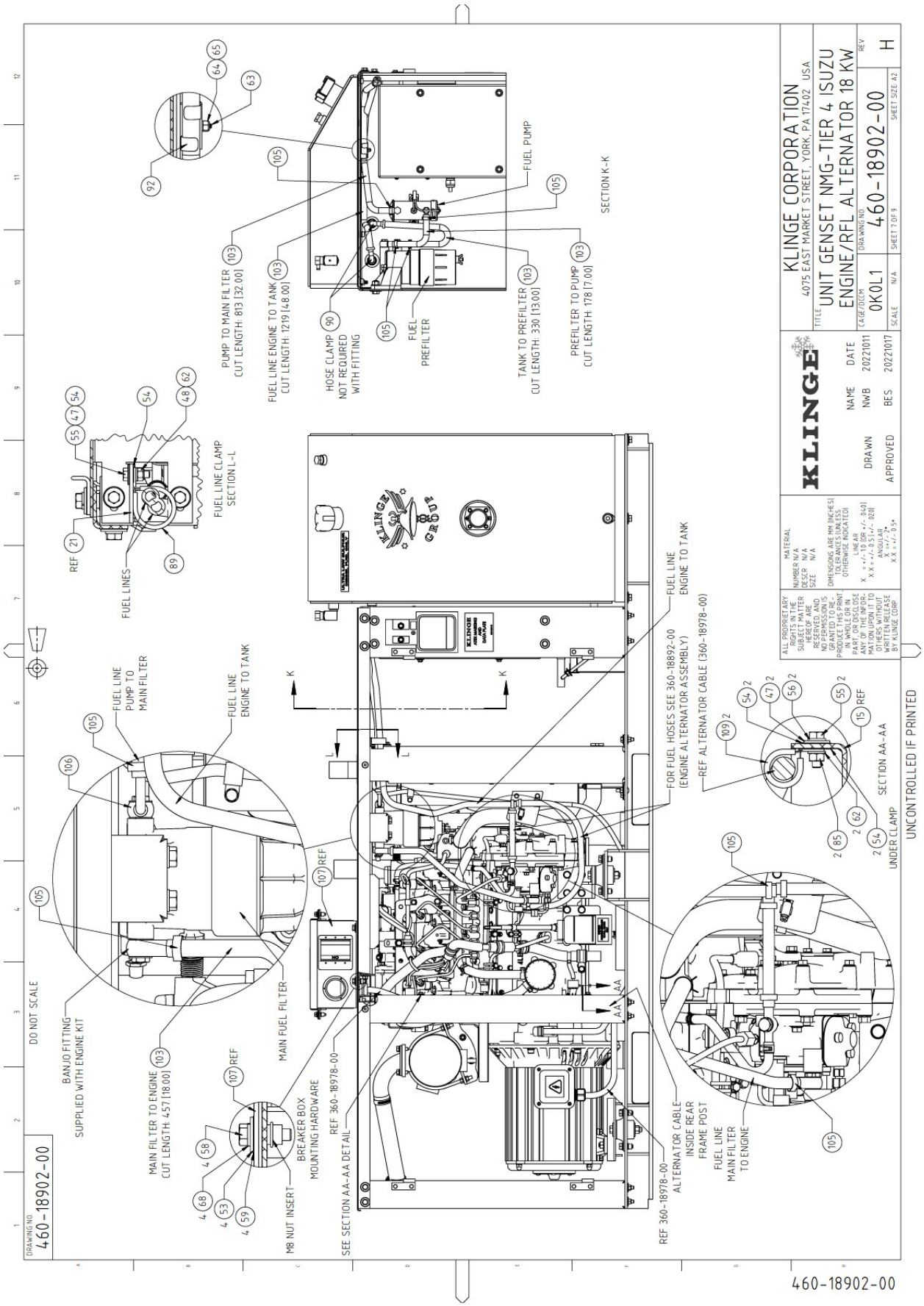
KLINGE CORPORATION
4075 EAST MARKET STREET, YORK, PA 17402 USA
UNIT GENSET NMG-TIER 4 ISUZU
ENGINE/RFL ALTERNATOR 18 KW
460-18902-00
H
SHEET 1 OF 9
SHEET SIZE A2
0K0L1
N/A
KLINGE
DRAWN NWB 20221011
APPROVED BES 20221017
ALL PROPRIETARY RIGHTS IN THE SUBJECT MATTER HEREOF ARE RESERVED, AND NO PERMISSION IS GRANTED TO REPRODUCE THIS DOCUMENT IN WHOLE OR IN PART, OR DISCLOSE ANY OF THE INFORMATION CONTAINED TO OTHERS WITHOUT WRITTEN RELEASE BY KLINGE CORP
DIMENSIONS ARE MM [INCHES] TOLERANCES UNLESS OTHERWISE INDICATED
DO NOT SCALE
UNCONTROLLED IF PRINTED
PUMP TO MAIN FILTER CUT LENGTH: 813 [32.00]
FUEL LINE ENGINE TO TANK CUT LENGTH: 1219 [48.00]
HOSE CLAMP NOT REQUIRED WITH FITTING
FUEL PREFILTER
TANK TO PREFILTER CUT LENGTH: 330 [13.00]
PREFILTER TO PUMP CUT LENGTH 178 [7.00]
FUEL PUMP
SECTION K-K
FUEL LINE CLAMP SECTION L-L
FUEL LINES
FUEL LINE PUMP TO MAIN FILTER
FUEL LINE ENGINE TO TANK
FUEL LINE ENGINE TO TANK
FOR FUEL HOSES SEE 360-18892-00 (ENGINE ALTERNATOR ASSEMBLY)
REF ALTERNATOR CABLE (360-18978-00)
SECTION AA-AA
UNDER CLAMP
BANJO FITTING SUPPLIED WITH ENGINE KIT
MAIN FILTER TO ENGINE CUT LENGTH: 457 [18.00]
MAIN FUEL FILTER
BREAKER BOX MOUNTING HARDWARE
M8 NUT INSERT
REF 360-18978-00
SEE SECTION AA-AA DETAIL
REF 360-18978-00
ALTERNATOR CABLE INSIDE REAR FRAME POST
FUEL LINE MAIN FILTER TO ENGINE
460-18902-00

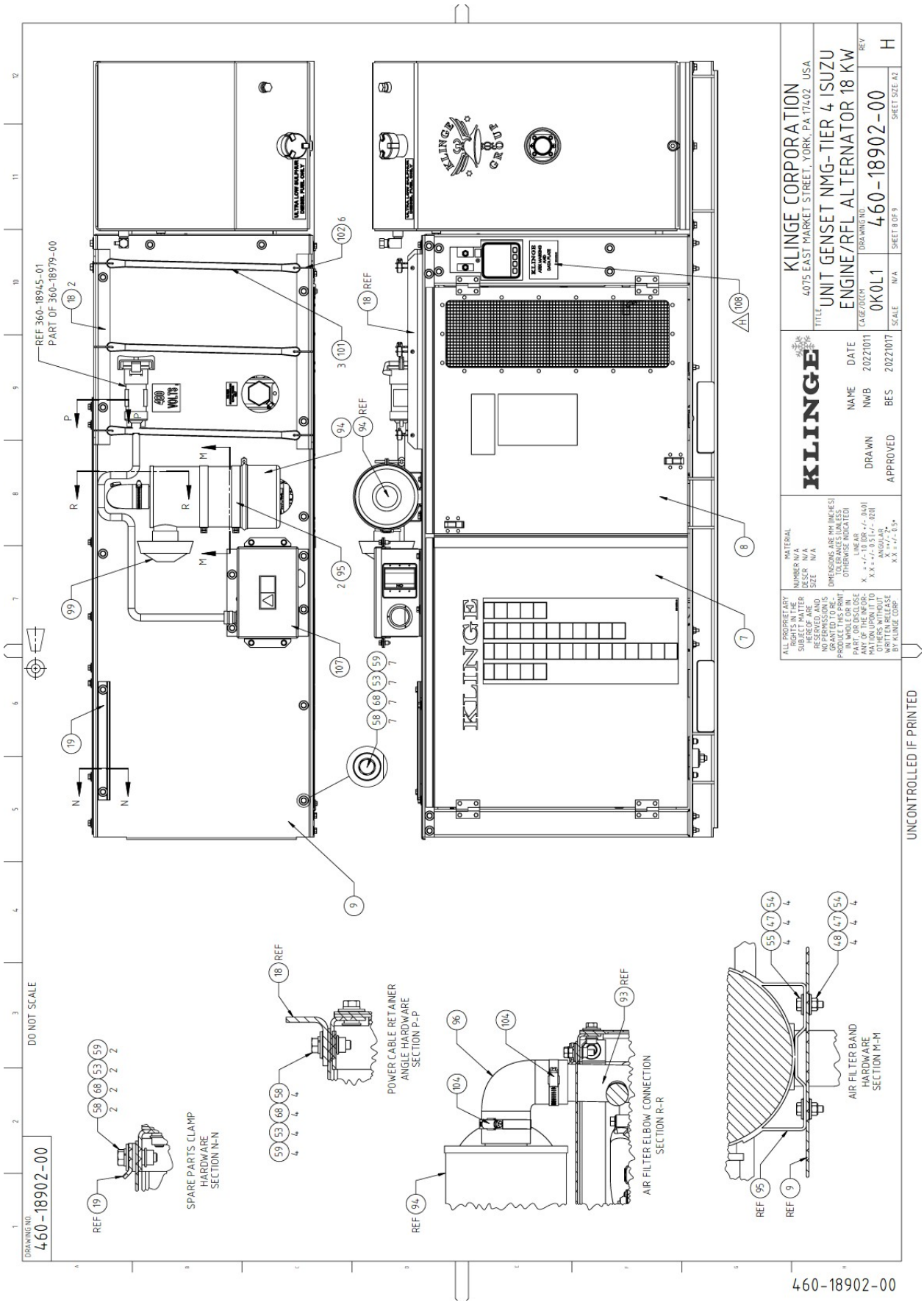
KLINGE CORPORATION
4075 EAST MARKET STREET, YORK, PA 17402 USA
UNIT GENSET NMG-TIER 4 ISUZU
ENGINE/RFL ALTERNATOR 18 KW
460-18902-00
H
KLINGE
DRAWN NWB 20221011
APPROVED BES 20221017
UNCONTROLLED IF PRINTED
DO NOT SCALE
REF 360-18945-01
PART OF 360-18979-00
SPARE PARTS CLAMP
HARDWARE
SECTION N-N
POWER CABLE RETAINER
ANGLE HARDWARE
SECTION P-P
AIR FILTER ELBOW CONNECTION
SECTION R-R
AIR FILTER BAND
HARDWARE
SECTION M-M
460-18902-00

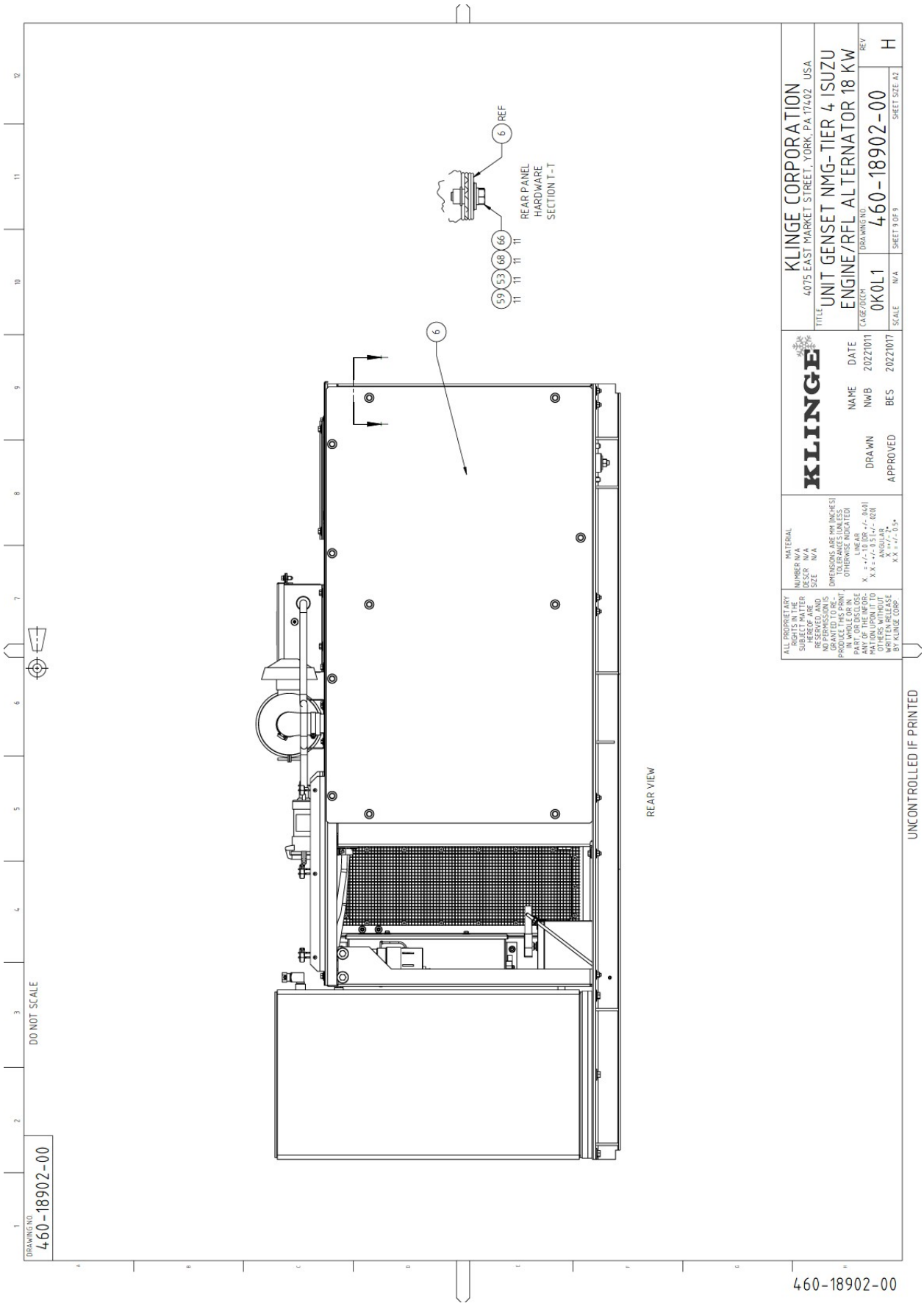
REF
REAR PANEL
HARDWARE
SECTION T-T
REAR VIEW
DO NOT SCALE
DRAWING NO
460-18902-00
KLINGE CORPORATION
4075 EAST MARKET STREET, YORK, PA 17402 USA
TITLE
UNIT GENSET NMG-TIER 4 ISUZU
ENGINE/RFL ALTERNATOR 18 KW
CAGE/DOCN
0K0L1
DRAWING NO
460-18902-00
REV
H
SCALE
N/A
SHEET 9 OF 9
SHEET SIZE A2
KLINGE
NAME
DATE
DRAWN
NWB
20221011
APPROVED
BES
20221017
MATERIAL
NUMBER N/A
DESCR N/A
SIZE N/A
DIMENSIONS ARE MM [INCHES]
TOLERANCES UNLESS
OTHERWISE INDICATED
LINEAR
X. = +/-.10 [CR +/- .040]
X.X = +/-.05 [+/- .020]
ANGULAR
X.X = +/- 2°
X.X = +/- 0.5°
ALL PROPRIETARY RIGHTS IN THE SUBJECT MATTER HEREIN ARE RESERVED AND NO PERMISSION IS GRANTED TO REPRODUCE THIS PRINT IN WHOLE OR IN PART, OR DISCLOSE ANY OF THE INFORMATION UPON IT TO OTHERS WITHOUT WRITTEN RELEASE BY KLINGE CORP.
UNCONTROLLED IF PRINTED
460-18902-00

DRAWING NO. 360-18892-00

DO NOT SCALE

REV	DATE	DESCRIPTION	CHANGE NO	DRAWN	APPROVED
A	10/11/2022	PLACE HOLDER LINE ADDED FOR ITEM 8	22-228	RJK	BES
B	20221024	ITEM 8 (GROUND STRAP) ADDED TO BOM. ITEM 12 (ALTERNATOR) PART NUMBER CHANGED.	22-237	RJK	BES
C	20230405	ITEM #5 WAS K21-16218-00, ITEM #20 WAS #21, ITEM #21 WAS #23, ITEM # 22 WAS #24, ITEM #23 WAS #25, ITEM #24 WAS #26, ITEM #25 WAS #27, ITEM #26 WAS #28, ITEM #27 WAS #29, ITEM #28 WAS #20, ITEM #29 WAS #22, UPDATED FUEL LINE SHEET 6	23-059	DBG	BES
D	20230612	ITEM #3 QTY WAS 2.13 FT, UPDATED ITEM #3 FUEL LINE HOSE LENGTHS SHT 6	23-167	DBG	BES
E	20250709	BALLOON #21 WAS #23 AT DRIVE DISC TO FLYWHEEL SHEET 2	25-161	DBG	BES
F	20251208	REMOVED ITEM #25 (K26-25310-15) FROM BOM AND BALLOON, UPDATED WASHER NOTE SHEET 6, ADDED NOTE TO ITEM #10 SHEET 7	25-245	DBG	BES

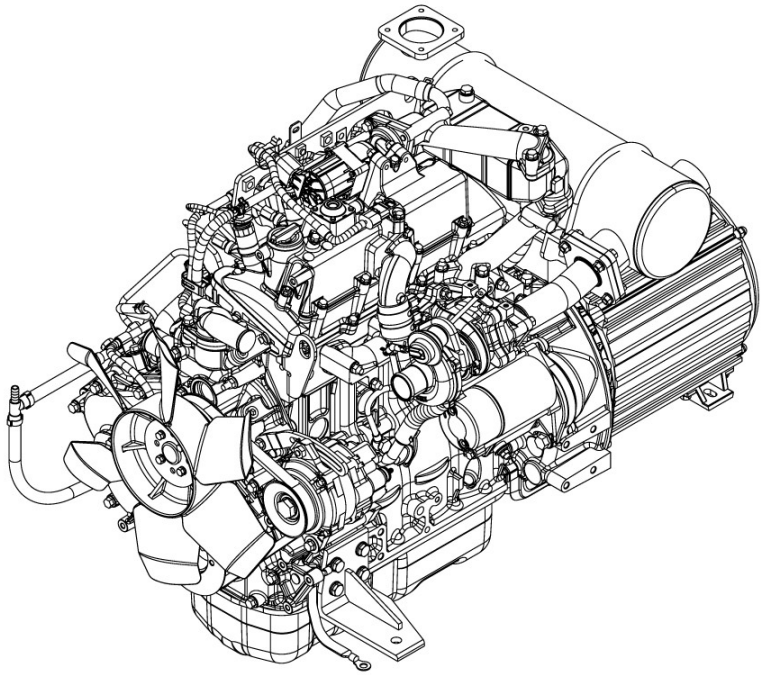

ITEM NO	PART NO	DESCRIPTION	QTY
29	K21-50224-20	SCREW HEX SS M6 X 1 X 20 FULL__THD	4
28	K21-50401-06	WASHER FLAT SS M6 6.4 X 12 X 1.4-1.8 18.8 DIN 125	4
27	K26-25310-16	BOLT, HEX WITH WASHER, STAINLESS STEEL, M10 X 1.0 X 25	1
26	K26-25310-14	FITTING, BANJO, FUEL LINE, ISUZU	1
F 25			1
24	XB-302169	BRACKET, OIL DRAIN HOSE	1
23	K21-16681-30	SCREW CAP SOCKET ZINC-ALLOY M10 X 1.5 - 30	6
22	XB-992749	WASHER, FLAT, ZINC PLATED, M8	8
21	XB-992659-16	SCREW, HEX, CAP SOCKET, BLACK OXIDE, M8 X 16	8
20	K21-50226-25	SCREW HEX SS M10 X 1.5 X 25 18-8 933 FULL THREAD	3
19	K21-50401-10	WASHER FLAT SS M10 10.5 X 20 X 2 18-8 DIN 125	19
18	K21-50421-10	WASHER, LOCK, SPRING, STAINLESS STEEL, M10 X 18.4 X 2.5	19
17	XB-992610-30	BOLT, HEX, ZINC PLATED, M10 X 30 MM	8
16	XB-999094	CAP, BOTTLE, RADIATOR OVERFLOW	1
15	XB-999093	BOTTLE, COOLANT, OVERFLOW	1
14	XB-152043	DECAL, "50/50 ETHYLENE GLYCOL / WATER"	1
13	360-14381-00	SUPPORT OVERFLOW BOTTLE ASSEMBLY NMG BLACK	1
12	360-18951-00	ALTERNATOR RFL-30 MODIFIED	1
11	360-14518-02	HOSE ASSEMBLY OIL DRAIN ISUZU	1
10	K23-13332-07	FITTING, 90 DEGREE, CARBON STEEL, 7/8 INCH	1
9	XB-998200	FAN, COOLING, SUCTION, PLASTIC, 6 BLADE, ISUZU	1
8	K25-26621-08	STRAP GROUND 8" LG 3/8" MOUNTING HOLE	1
7	360-18868-01	MOUNT ENGINE RIGHT TIER 4 PAINTED	1
6	360-18867-01	MOUNT ENGINE LEFT TIER 4 PAINTED	1
5	K21-16686-10	CLAMP OETIKER SS DOUBLE PINCH (15-18MM)	4
4	K28-11150-00	FITTING 3/8 HOSE BARBED TEE CONNECTOR	1
3	K28-10804-06	HOSE, RUBBER, 3/8 INCH ID, PUSH LOCK (QTY IN FT)	1.96
2	K28-10804-04	HOSE, RUBBER, 1/4 INCH ID, PUSH LOCK (QTY IN FT)	0.75
1	K26-25310-00	ENGINE, ISUZU, 4LE2TAGV-07 (MODIFIED)	1

NOTES:
1. USE ANTI-SEIZE KLINGE P/N K13-02069-00 ON ALL STAINLESS STEEL FASTENERS

ALL PROPRIETARY RIGHTS IN THE SUBJECT MATTER HEREOF ARE RESERVED, AND NO PERMISSION IS GRANTED TO REPRODUCE THIS PRINT, IN WHOLE OR IN PART, OR DISCLOSE ANY OF THE INFORMATION UPON IT TO OTHERS WITHOUT WRITTEN RELEASE BY KLINGE CORP.

MATERIAL
NUMBER N/A
DESCR N/A
SIZE N/A

DIMENSIONS ARE MM [INCHES]
TOLERANCES [UNLESS OTHERWISE INDICATED]
LINEAR
X. = +/- 1.0 [OR +/- .040]
X.X = +/- 0.5 [+/- .020]
ANGULAR
X. =+/- 2°
X.X = +/- 0.5°

KLINGE

	NAME	DATE
DRAWN	AUV	20220429
APPROVED	BES	20220919

KLINGE CORPORATION
4075 EAST MARKET STREET, YORK, PA 17402 USA

TITLE
ENGINE ALTERNATOR ASSEMBLY TIER 4

CAGE/DCCM 0K0L1
DRAWING NO. 360-18892-00
REV F
SCALE N/A
SHEET 1 OF 7
SHEET SIZE: A2

UNCONTROLLED IF PRINTED

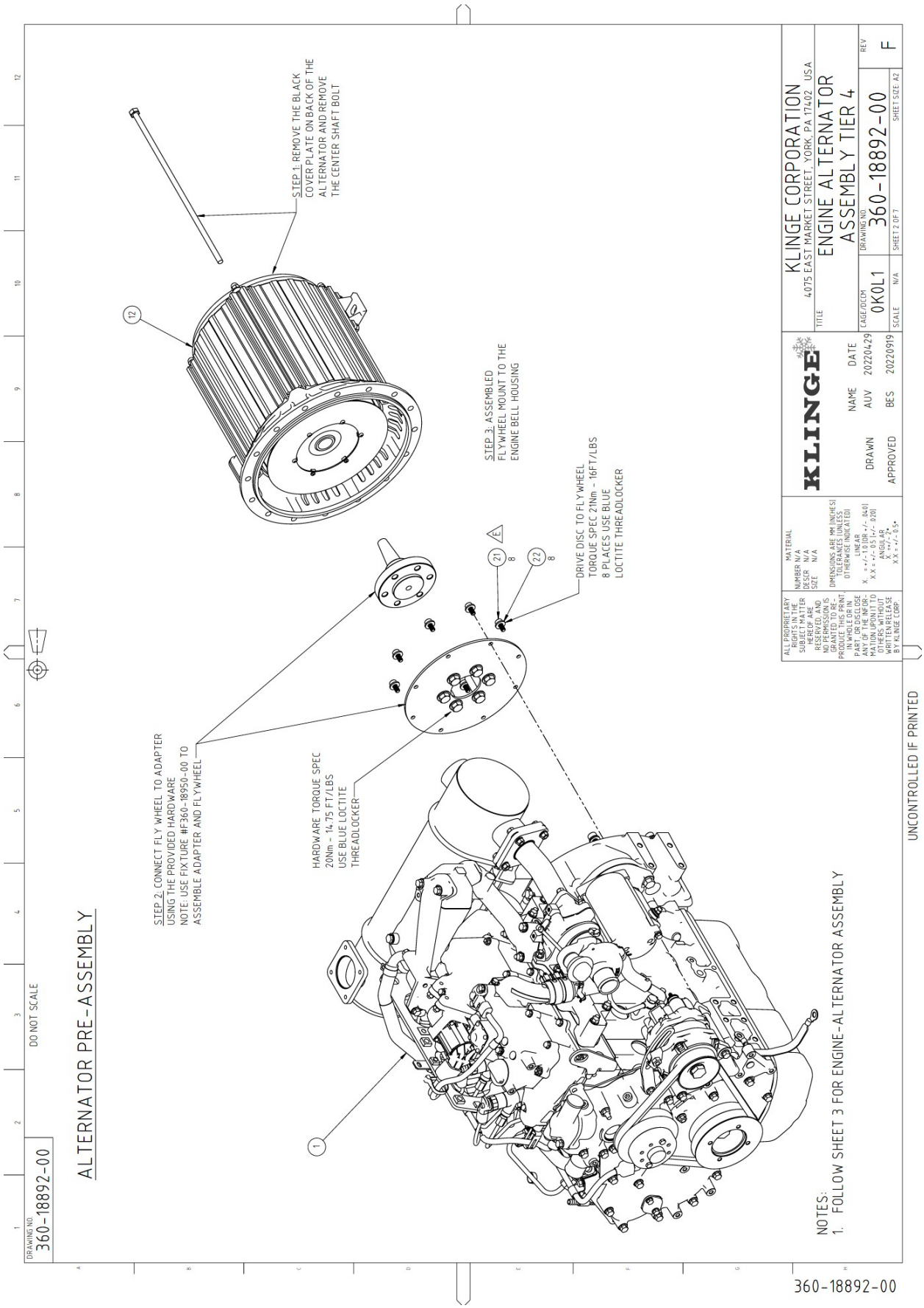
DRAWING NO
360-18892-00
ALTERNATOR PRE-ASSEMBLY
DO NOT SCALE
STEP 1: REMOVE THE BLACK COVER PLATE ON BACK OF THE ALTERNATOR AND REMOVE THE CENTER SHAFT BOLT
12
STEP 2: CONNECT FLY WHEEL TO ADAPTER USING THE PROVIDED HARDWARE NOTE: USE FIXTURE #F360-18950-00 TO ASSEMBLE ADAPTER AND FLYWHEEL
HARDWARE TORQUE SPEC 20Nm - 14.75 FT/LBS USE BLUE LOCTITE THREADLOCKER
STEP 3: ASSEMBLED FLYWHEEL MOUNT TO THE ENGINE BELL HOUSING
21 8
22 8
DRIVE DISC TO FLY WHEEL TORQUE SPEC 27Nm - 16FT/LBS 8 PLACES USE BLUE LOCTITE THREADLOCKER
1
NOTES:
1. FOLLOW SHEET 3 FOR ENGINE-ALTERNATOR ASSEMBLY
UNCONTROLLED IF PRINTED
ALL PROPRIETARY RIGHTS IN THE SUBJECT MATTER HEREOF ARE RESERVED AND NO PERMISSION IS GRANTED TO REPRODUCE THIS PRINT, IN WHOLE OR IN PART, OR DISCLOSE ANY OF THE INFORMATION UPON IT TO OTHERS WITHOUT WRITTEN RELEASE BY KLINGE CORP.
NUMBER N/A
DESCR N/A
SIZE N/A
MATERIAL
DIMENSIONS ARE MM [INCHES] TOLERANCES UNLESS OTHERWISE INDICATED
LINEAR
X. = +/- 1.0 [OR +/- .040]
X.X = +/- 0.5 [+/- .020]
ANGULAR
X.X = +/- 0.5°
KLINGE
NAME DATE
DRAWN AUV 20220429
APPROVED BES 20220919
KLINGE CORPORATION
4075 EAST MARKET STREET, YORK, PA 17402 USA
TITLE
ENGINE ALTERNATOR ASSEMBLY TIER 4
CAGE/DCM 0K0L1
DRAWING NO 360-18892-00
REV F
SCALE N/A
SHEET 2 OF 7
SHEET SIZE A2
360-18892-00

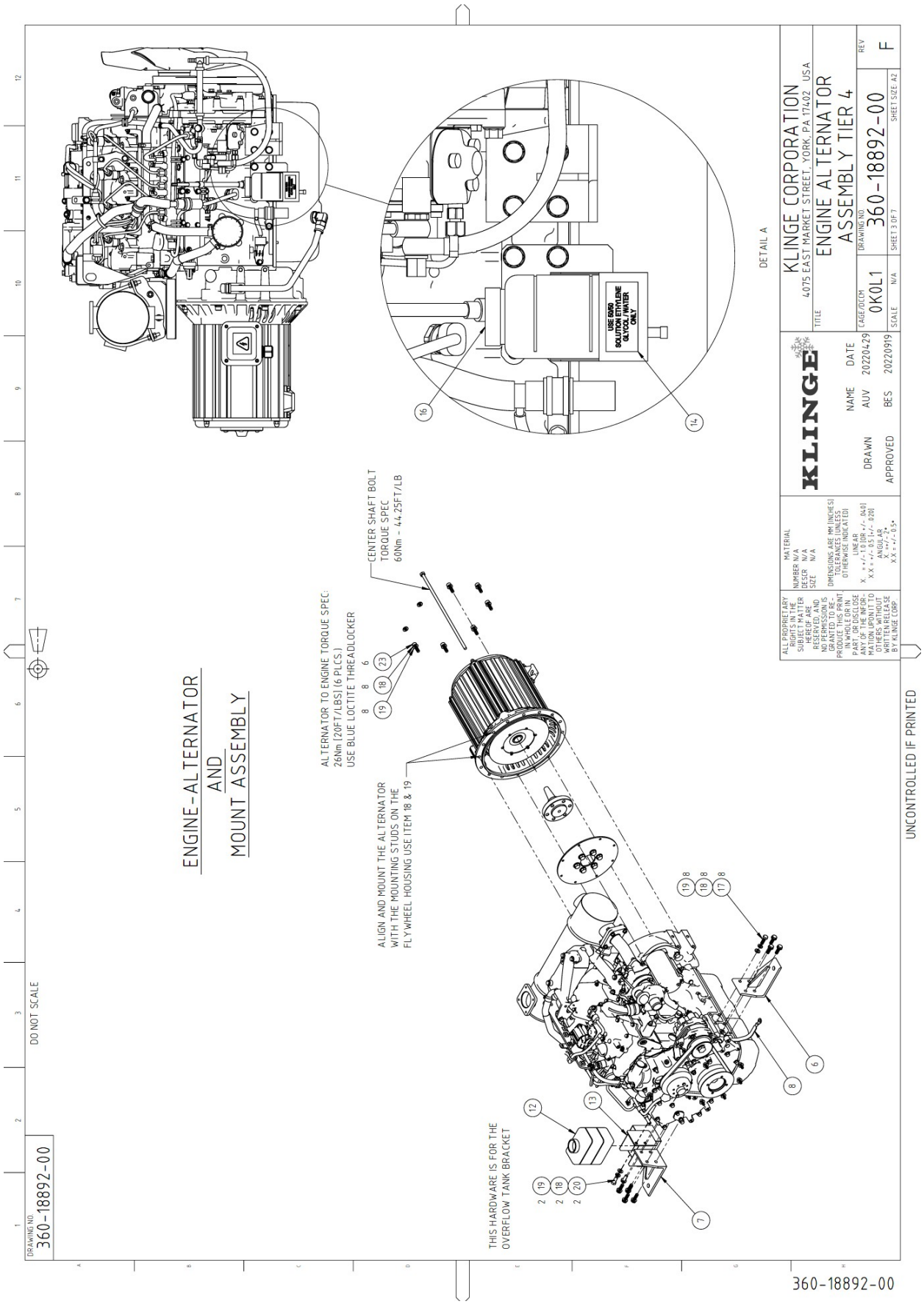
ENGINE-ALTERNATOR
AND
MOUNT ASSEMBLY
DO NOT SCALE
DRAWING NO.
360-18892-00
ALTERNATOR TO ENGINE TORQUE SPEC:
26Nm [20FT/LBS] (6 PLCS.)
USE BLUE LOCTITE THREADLOCKER
CENTER SHAFT BOLT
TORQUE SPEC
60Nm - 44.25FT/LB
ALIGN AND MOUNT THE ALTERNATOR
WITH THE MOUNTING STUDS ON THE
FLYWHEEL HOUSING USE ITEM 18 & 19
THIS HARDWARE IS FOR THE
OVERFLOW TANK BRACKET
USE 50/50
SOLUTION ETHYLENE
GLYCOL/WATER
ONLY
DETAIL A
KLINGE CORPORATION
4075 EAST MARKET STREET, YORK PA 17402 USA
ENGINE ALTERNATOR
ASSEMBLY TIER 4
360-18892-00
REV F
SHEET 3 OF 7
SHEET SIZE A2
SCALE N/A
CAGE/DLCN 0K0L1
KLINGE
DRAWN AUV 20220429
APPROVED BES 20220919
MATERIAL
NUMBER N/A
DESCR N/A
SIZE N/A
DIMENSIONS ARE MM [INCHES]
TOLERANCES UNLESS
OTHERWISE INDICATED
LINEAR
X = +/-.1 [.0R +/- .040]
XX = +/-.5 [+/- .020]
ANGULAR
X = +/- 2°
XX = +/- 0.5°
ALL PROPRIETARY
RIGHTS IN THE
SUBJECT MATTER
HEREIN ARE
RESERVED, AND
NO PERMISSION IS
GRANTED TO RE-
PRODUCE THIS MATERIAL
IN WHOLE OR IN
PART, OR DISCLOSE
ANY OF THE INFOR-
MATION CONTAINED TO
OTHERS WITHOUT
WRITTEN RELEASE
BY KLINGE CORP
UNCONTROLLED IF PRINTED
360-18892-00

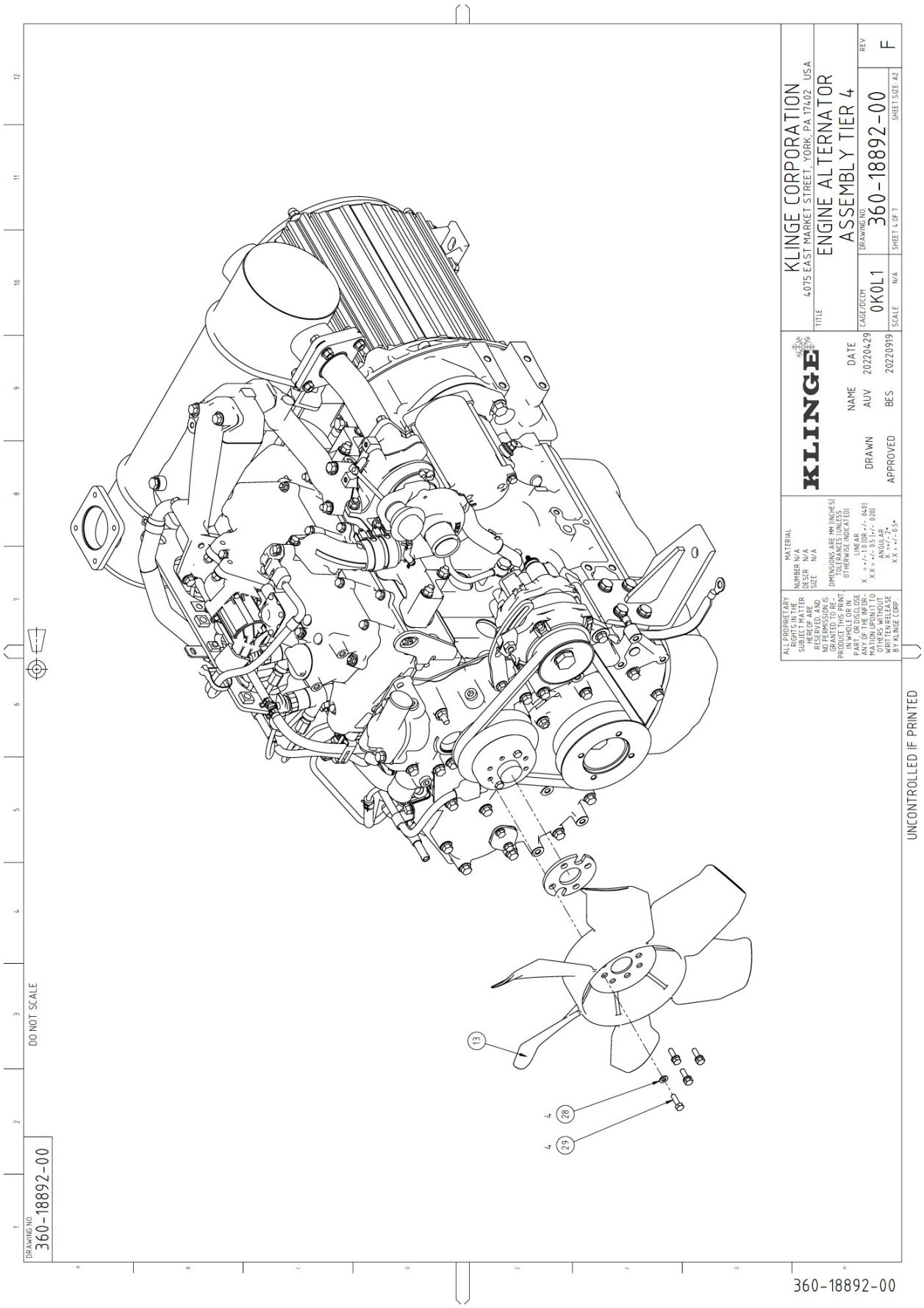
DRAWING NO
360-18892-00
DO NOT SCALE
13
4
28
4
29
ALL PROPRIETARY RIGHTS IN THE SUBJECT MATTER HEREIN ARE RESERVED AND NO PERMISSION IS GRANTED TO REPRODUCE, DISPLAY, PRINT, PART, OR DISCLOSE ANY OF THE INFORMATION UPON IT TO OTHERS WITHOUT THE WRITTEN RELEASE BY KLINGE CORP
MATERIAL
NUMBER N/A
DESCR N/A
SIZE N/A
DIMENSIONS ARE MM [INCHES] TOLERANCES UNLESS OTHERWISE INDICATED
LINEAR
X.. = +/-.10 [OR +/-.040]
X.X = +/-.05 [+/-.020]
X.XX = +/-.02
X.XXX = +/-.005
KLINGE
NAME DATE
DRAWN AUV 20220429
APPROVED BES 20220919
KLINGE CORPORATION
4075 EAST MARKET STREET, YORK, PA 17402 USA
TITLE
ENGINE ALTERNATOR ASSEMBLY TIER 4
CAGE/DLCM 0K0L1
DRAWING NO 360-18892-00
REV F
SCALE N/A
SHEET 4 OF 7
SHEET SIZE A2
UNCONTROLLED IF PRINTED
360-18892-00

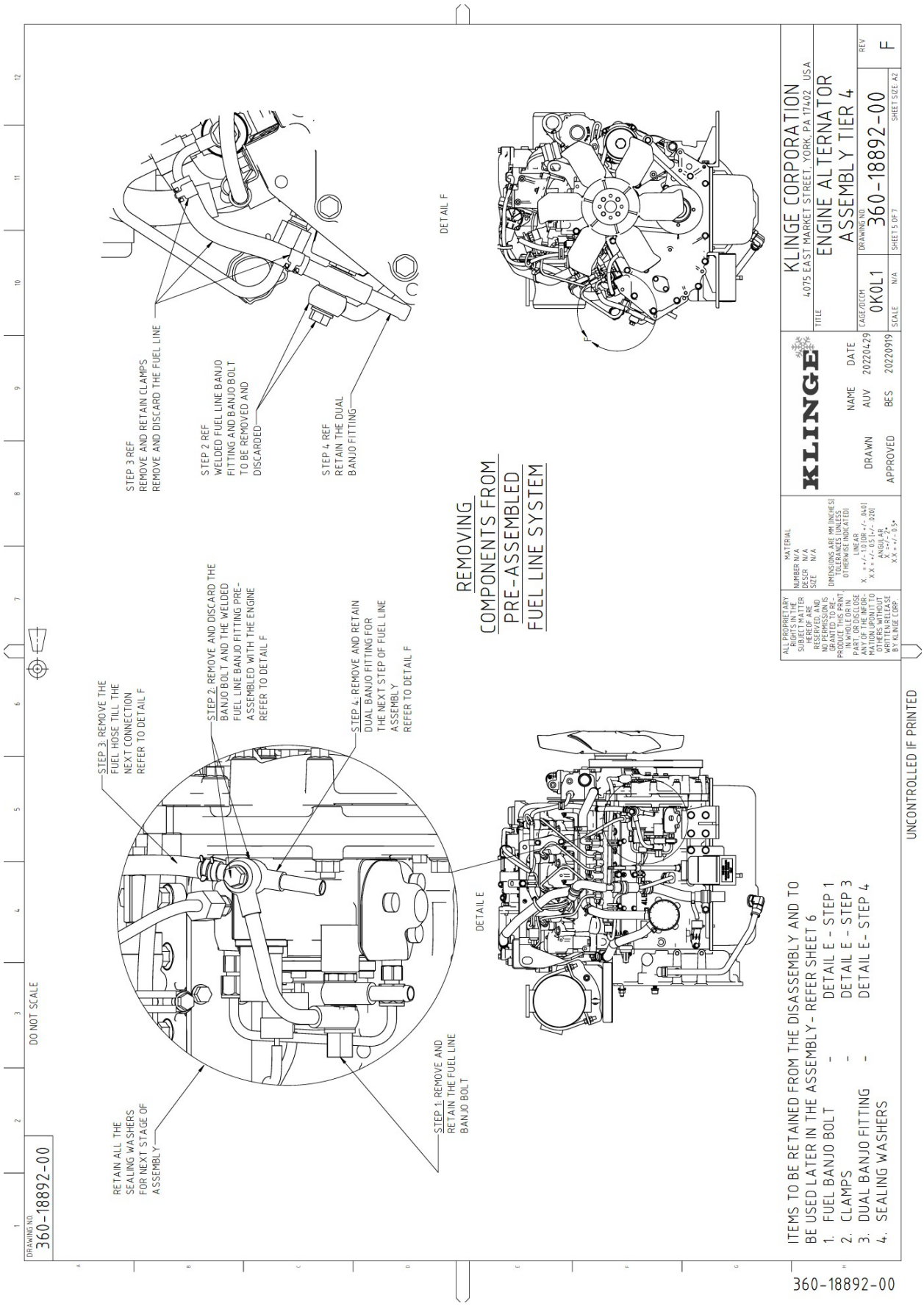
REMOVING
COMPONENTS FROM
PRE-ASSEMBLED
FUEL LINE SYSTEM
DETAIL E
DETAIL F
STEP 1: REMOVE AND RETAIN THE FUEL LINE BANJO BOLT
STEP 2: REMOVE AND DISCARD THE BANJO BOLT AND THE WELDED FUEL LINE BANJO FITTING PRE-ASSEMBLED WITH THE ENGINE REFER TO DETAIL F
STEP 3: REMOVE THE FUEL HOSE TILL THE NEXT CONNECTION REFER TO DETAIL F
STEP 4: REMOVE AND RETAIN DUAL BANJO FITTING FOR THE NEXT STEP OF FUEL LINE ASSEMBLY REFER TO DETAIL F
RETAIN ALL THE SEALING WASHERS FOR NEXT STAGE OF ASSEMBLY
STEP 3 REF
REMOVE AND RETAIN CLAMPS
REMOVE AND DISCARD THE FUEL LINE
STEP 2 REF
WELDED FUEL LINE BANJO FITTING AND BANJO BOLT TO BE REMOVED AND DISCARDED
STEP 4 REF
RETAIN THE DUAL BANJO FITTING
ITEMS TO BE RETAINED FROM THE DISASSEMBLY AND TO BE USED LATER IN THE ASSEMBLY - REFER SHEET 6
1. FUEL BANJO BOLT - DETAIL E - STEP 1
2. CLAMPS - DETAIL E - STEP 3
3. DUAL BANJO FITTING - DETAIL E- STEP 4
4. SEALING WASHERS
DO NOT SCALE
DRAWING NO 360-18892-00
KLINGE CORPORATION
4075 EAST MARKET STREET, YORK PA 17402 USA
TITLE ENGINE ALTERNATOR ASSEMBLY TIER 4
CAGE/OLCM 0K0L1
DRAWING NO 360-18892-00
REV F
SCALE N/A
SHEET 5 OF 7
SHEET SIZE A2
DRAWN AUV 20220429
APPROVED BES 20220919
MATERIAL NUMBER N/A DESCR N/A SIZE N/A
DIMENSIONS ARE MM [INCHES] TOLERANCES UNLESS OTHERWISE INDICATED
LINEAR X. = +/-1.0 [OR +/- .040] XX = +/- 0.5 [+/- .020] XXX = +/- 0.25
ANGULAR X = +/- 2°
XX = +/- 0.5°
ALL PROPRIETARY RIGHTS IN THE SUBJECT MATTER HEREOF ARE RESERVED, AND NO PERMISSION IS GRANTED TO REPRODUCE THIS DRAWING IN WHOLE OR IN PART, OR DISCLOSE ANY OF THE INFORMATION UPON IT TO OTHERS WITHOUT WRITTEN RELEASE BY KLINGE CORP
UNCONTROLLED IF PRINTED
360-18892-00

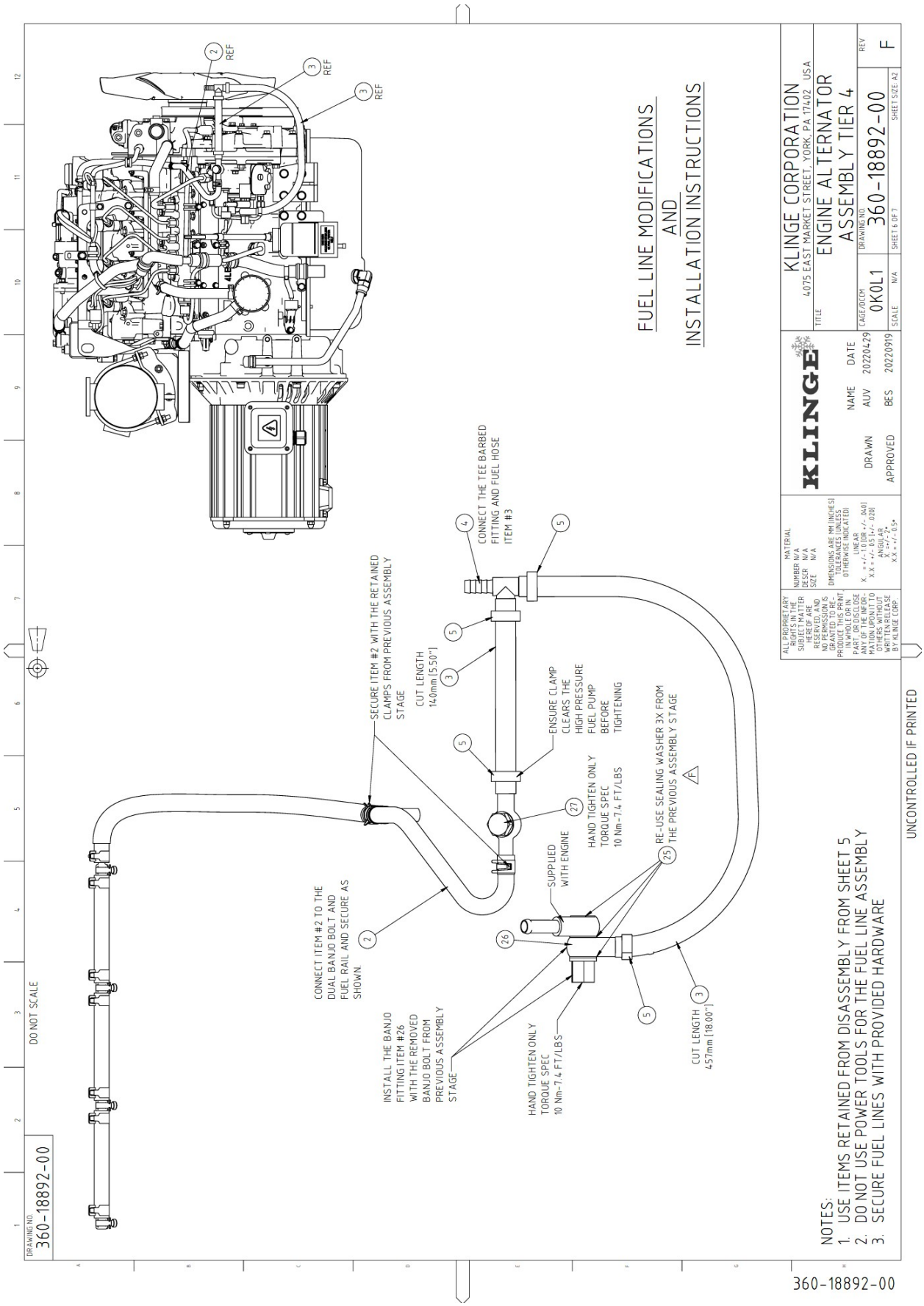
FUEL LINE MODIFICATIONS
AND
INSTALLATION INSTRUCTIONS
KLINGE CORPORATION
4075 EAST MARKET STREET, YORK PA 17402 USA
ENGINE ALTERNATOR ASSEMBLY TIER 4
360-18892-00
REV F
SHEET 6 OF 7
SHEET SIZE A2
CAGE/OLCM 0K0L1
SCALE N/A
DRAWN AUV 20220429
APPROVED BES 20220919
CONNECT THE TEE BARBED FITTING AND FUEL HOSE ITEM #3
SECURE ITEM #2 WITH THE RETAINED CLAMPS FROM PREVIOUS ASSEMBLY STAGE
CUT LENGTH 140mm [5.50"]
ENSURE CLAMP CLEARS THE HIGH PRESSURE FUEL PUMP BEFORE TIGHTENING
HAND TIGHTEN ONLY TORQUE SPEC 10 Nm-7.4 FT/LBS
RE-USE SEALING WASHER 3X FROM THE PREVIOUS ASSEMBLY STAGE
SUPPLIED WITH ENGINE
CONNECT ITEM #2 TO THE DUAL BANJO BOLT AND FUEL RAIL AND SECURE AS SHOWN.
INSTALL THE BANJO FITTING ITEM #26 WITH THE REMOVED BANJO BOLT FROM PREVIOUS ASSEMBLY STAGE
HAND TIGHTEN ONLY TORQUE SPEC 10 Nm-7.4 FT/LBS
CUT LENGTH 457mm [18.00"]
DO NOT SCALE
UNCONTROLLED IF PRINTED
NOTES:
1. USE ITEMS RETAINED FROM DISASSEMBLY FROM SHEET 5
2. DO NOT USE POWER TOOLS FOR THE FUEL LINE ASSEMBLY
3. SECURE FUEL LINES WITH PROVIDED HARDWARE
360-18892-00

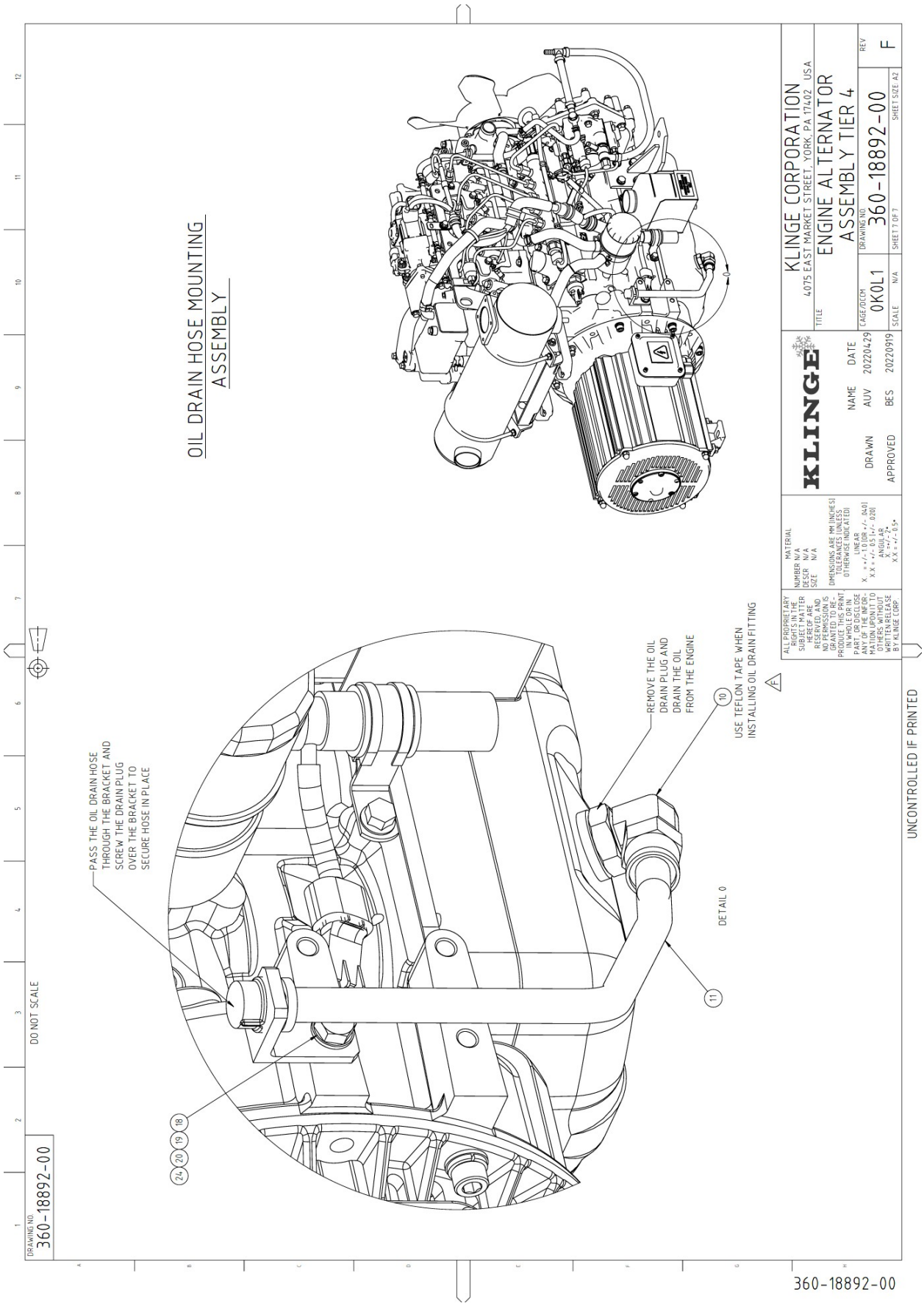
OIL DRAIN HOSE MOUNTING
ASSEMBLY
PASS THE OIL DRAIN HOSE THROUGH THE BRACKET AND SCREW THE DRAIN PLUG OVER THE BRACKET TO SECURE HOSE IN PLACE
REMOVE THE OIL DRAIN PLUG AND DRAIN THE OIL FROM THE ENGINE
USE TEFLON TAPE WHEN INSTALLING OIL DRAIN FITTING
DETAIL D
DO NOT SCALE
DRAWING NO. 360-18892-00
KLINGE CORPORATION
4075 EAST MARKET STREET, YORK, PA 17402 USA
ENGINE ALTERNATOR ASSEMBLY TIER 4
360-18892-00
REV F
SHEET 7 OF 7
SHEET SIZE A2
SCALE N/A
CAGE/DLCM 0K0L1
DRAWN AUV 20220429
APPROVED BES 20220919
UNCONTROLLED IF PRINTED
360-18892-00

DRAWING NO. 360-18922-00

DO NOT SCALE

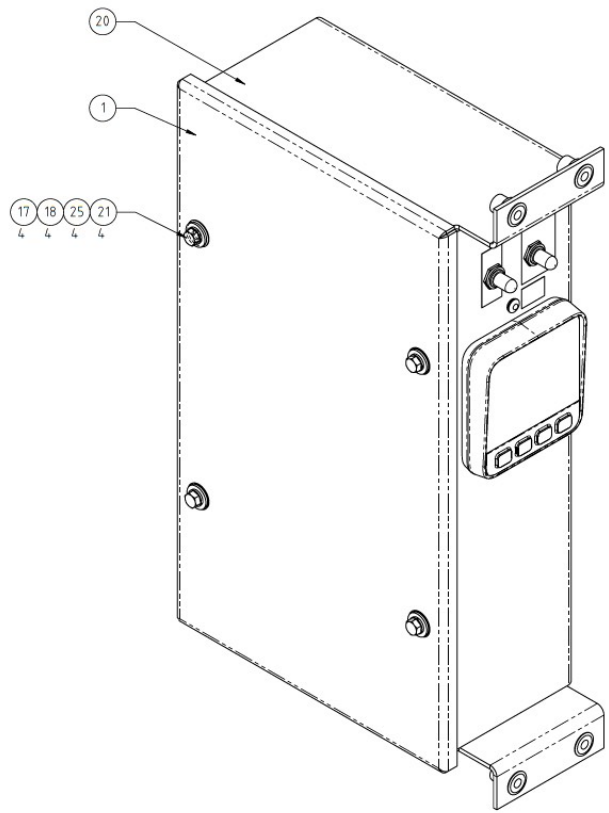

REV	DATE	DESCRIPTION	CHANGE NO	DRAWN	APPROVED
B	20221114	ADD ITEM 32 AND CHANGE SIZE OF HARD FOR BAP SENSOR. CHANGED VIEWS OF MODELS. CHANGES IN NOTES.	22-260	LAH	BES
C	20221228	BALLOON 17 WAS 22 SECTION B-B SHEET 2, ADDED ITEM #33 SHEET 2, ROTATED RELAY SOCKET 180° SHEET 2	22-321	DBG	BES
D	20240417	ITEM #17 QTY WAS 7, ADDED ITEM #34, ITEM #34 REPLACES ITEM #17 SECTION B-B SHEET 2, TITLE WAS BOX CONTROL WHITE	24-054	DBG	BES
E	20251022	ITEM #13 WAS K26-25310-13	25-278	DM	BES
F	20251117	ITEM #7 QTY WAS 1, ADDED BOOT NOTE TO ITEM #6 SHEET 2	25-292	DBG	BES
G	20260319	REMOVED ITEM #19 (K21-18425-04) QTY 2 & ITEM #28 (K21-16583-06) QTY 2, FLIPPED HARDWARE TO OUTSIDE OF BOX, ITEM #25 QTY WAS 5, ITEM #26 WAS K21-50224-18	26-032	DBG	BES

ITEM NO	PART NO	DESCRIPTION	QTY
34	K21-15797-06	WASHER LOCK EXT INT SS 1/4"	1
33	360-18949-00	CABLE BATTERY CHARGER DISCONNECT WITH PLUG	1
32	K21-50421-05	WASHER, LOCK, SPRING, STAINLESS STEEL, M5 X 9.2 X 1.2	2
31	K28-10995-010	RING O EPDM .25 ID X .375 OD X .06 W	1
30	360-18947-00	WIRING CONTROL	1
29	360-18941-00	HARNESS CONTROL	1
G 28			1
27	K21-50103-06	NUT HEX M6 THIN 18-8 SS	1
G 26	K21-50224-20	SCREW HEX SS M6 X 1 X 20	2
G 25	K21-50421-06	WASHER, LOCK, SPRING, STAINLESS STEEL, M6 X 12.2 X 1.5	7
24	K21-50401-05	WASHER, FLAT, STAINLESS STEEL, M5 X 10 X 1	2
23	K21-16400-06	SCR PAN SS M5x0.8x25MM FULLY THREADED 18-8	2
22	360-18935-00	HARNESS ENGINE NMG TIER 4	1
21	K21-50224-25	SCREW, HEX, STAINLESS STEEL, FULL THREAD, M6 X 1.00 X 25	4
20	360-18921-01	BOX CONTROL ENCLOSURE ASSY PAINTED NMG TIER 4	1
G 19			1
18	K21-16547-06	WASHER, FLAT, STAINLESS STEEL, M6 X 18 X 1.6	7
17	K21-18510-06	WASHER INSULATED PVC M6	6
16	K21-18420-16	SCREW FLAT HEAD PHILLIPS SS M6-1 X 16	4
15	060-18933-01	MOUNT BRACKET RIGHT ECM PAINTED	1
14	060-18932-01	MOUNT BRACKET LEFT ECM PAINTED	1
13	K26-25310-23	POWERVIEW GENERATOR DISPLAY - 4LE2TAGV PROGRAMMED	1
12	K35-06744-00	LABEL RPM	1
11	K35-06745-00	LABEL START/ON/OFF	1
10	K35-06746-00	LABEL PREHEAT	1
9	360-18958-00	LED RED W/ FERRULE	1
8	K24-22416-00	SWITCH SPST 12V 20A ON / OFF SCREW TERMINAL	1
7	K24-17239-00	BOOT TOGGLE SWITCH	1
6	K24-22556-00	SWITCH TOGGLE 3 POS OFF-ON-MOM	1
5	K25-26147-01	RING SEAL PLASTIC 1/2	1
4	K25-26340-02	NUT LOCK PLASTIC 1/2	1
3	K25-26129-03	CONNECTOR STAIGHT PLASTIC SHORT 1/2	1
2	XB-993011-20	RUBBER NEOPRENE 1/4 X 2 X 12" DUROMETER 70	1
1	360-18948-00	DOOR ASSEMBLY CONTROL BOX NMG TIER 4	1

NOTES:
1. USE ANTI-SEIZE KLINGE P/N K13-02069-00 ON ALL STAINLESS STEEL FASTENERS.
2. ITEM 29 AND 30 NOT SHOWN IN DRAWING.

ALL PROPRIETARY RIGHTS IN THE SUBJECT MATTER HEREOF ARE RESERVED, AND NO PERMISSION IS GRANTED TO RE-PRODUCE THIS PRINT, IN WHOLE OR IN PART, OR DISCLOSE ANY OF THE INFORMATION UPON IT TO OTHERS WITHOUT WRITTEN RELEASE BY KLINGE CORP.

MATERIAL
NUMBER N/A
DESCR N/A
SIZE N/A

DIMENSIONS ARE MM [INCHES]
TOLERANCES (UNLESS OTHERWISE INDICATED)
LINEAR
X. = +/- 1.0 [OR +/- .040]
X.X = +/- 0.5 [+/- .020]
ANGULAR
X. = +/- 2°
X.X = +/- 0.5°

KLINGE

	NAME	DATE
DRAWN	AUV	20220720
APPROVED	BES	20220928

KLINGE CORPORATION
4075 EAST MARKET STREET, YORK, PA 17402 USA

TITLE
BOX CONTROL ASSEMBLY

CAGE/DCCM 0K0L1 | DRAWING NO. 360-18922-00 | REV G
SCALE N/A | SHEET 1 OF 2 | SHEET SIZE A2

360-18922-00

UNCONTROLLED IF PRINTED

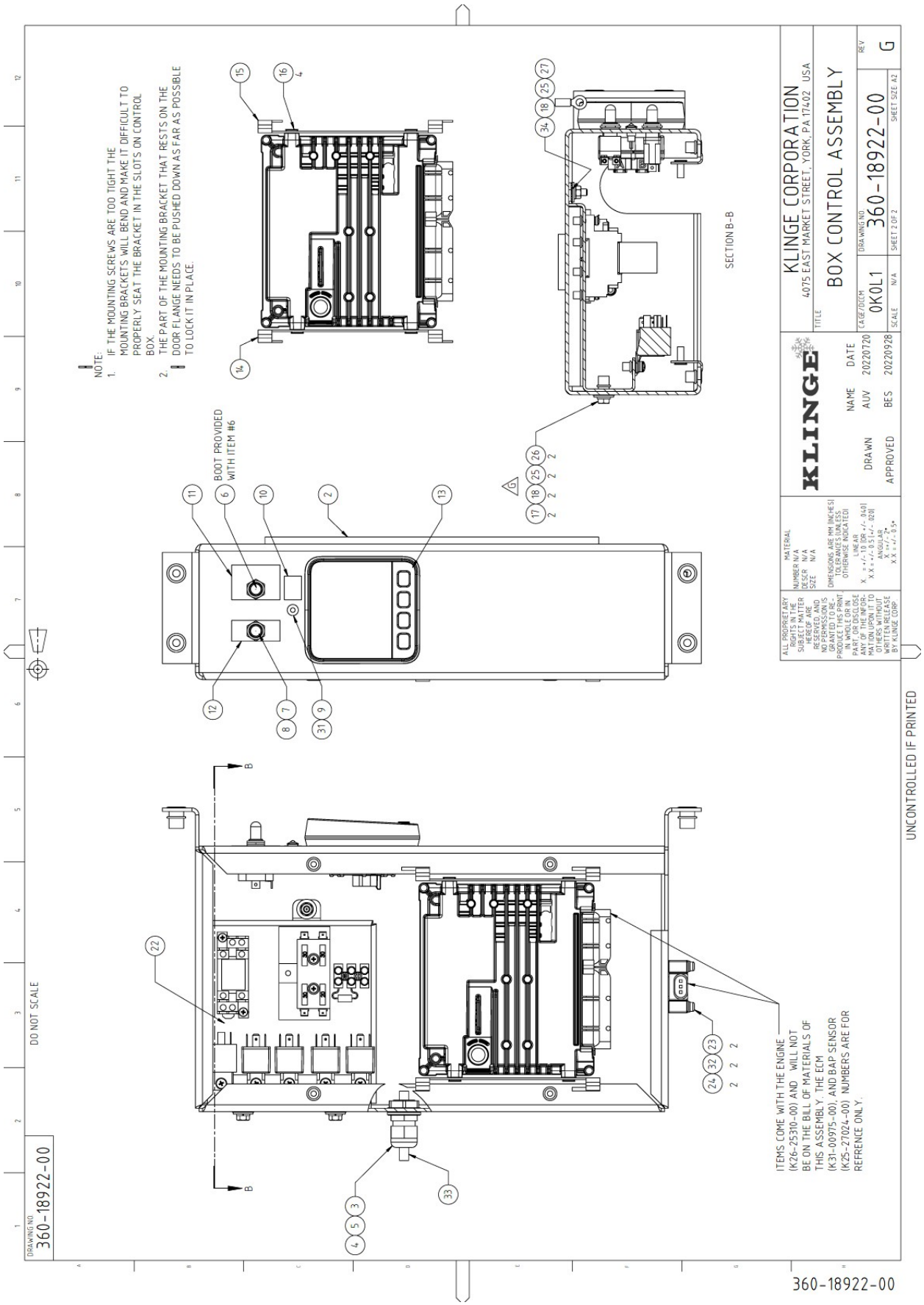
NOTE:
1. IF THE MOUNTING SCREWS ARE TOO TIGHT THE MOUNTING BRACKETS WILL BEND AND MAKE IT DIFFICULT TO PROPERLY SEAT THE BRACKET IN THE SLOTS ON CONTROL BOX.
2. THE PART OF THE MOUNTING BRACKET THAT RESTS ON THE DOOR FLANGE NEEDS TO BE PUSHED DOWN AS FAR AS POSSIBLE TO LOCK IT IN PLACE.
BOOT PROVIDED WITH ITEM #6
SECTION B-B
ITEMS COME WITH THE ENGINE (K26-25310-00) AND WILL NOT BE ON THE BILL OF MATERIALS OF THIS ASSEMBLY. THE ECM (K31-00975-00), AND BAP SENSOR (K25-27024-00) NUMBERS ARE FOR REFRENCE ONLY.
DO NOT SCALE
UNCONTROLLED IF PRINTED
KLINGE CORPORATION
4075 EAST MARKET STREET, YORK, PA 17402 USA
BOX CONTROL ASSEMBLY
360-18922-00
G
KLINGE
DRAWN AUV 20220720
APPROVED BES 20220928
CAGE/DUCM 0K0L1
SCALE N/A
SHEET 2 OF 2
SHEET SIZE A2
360-18922-00

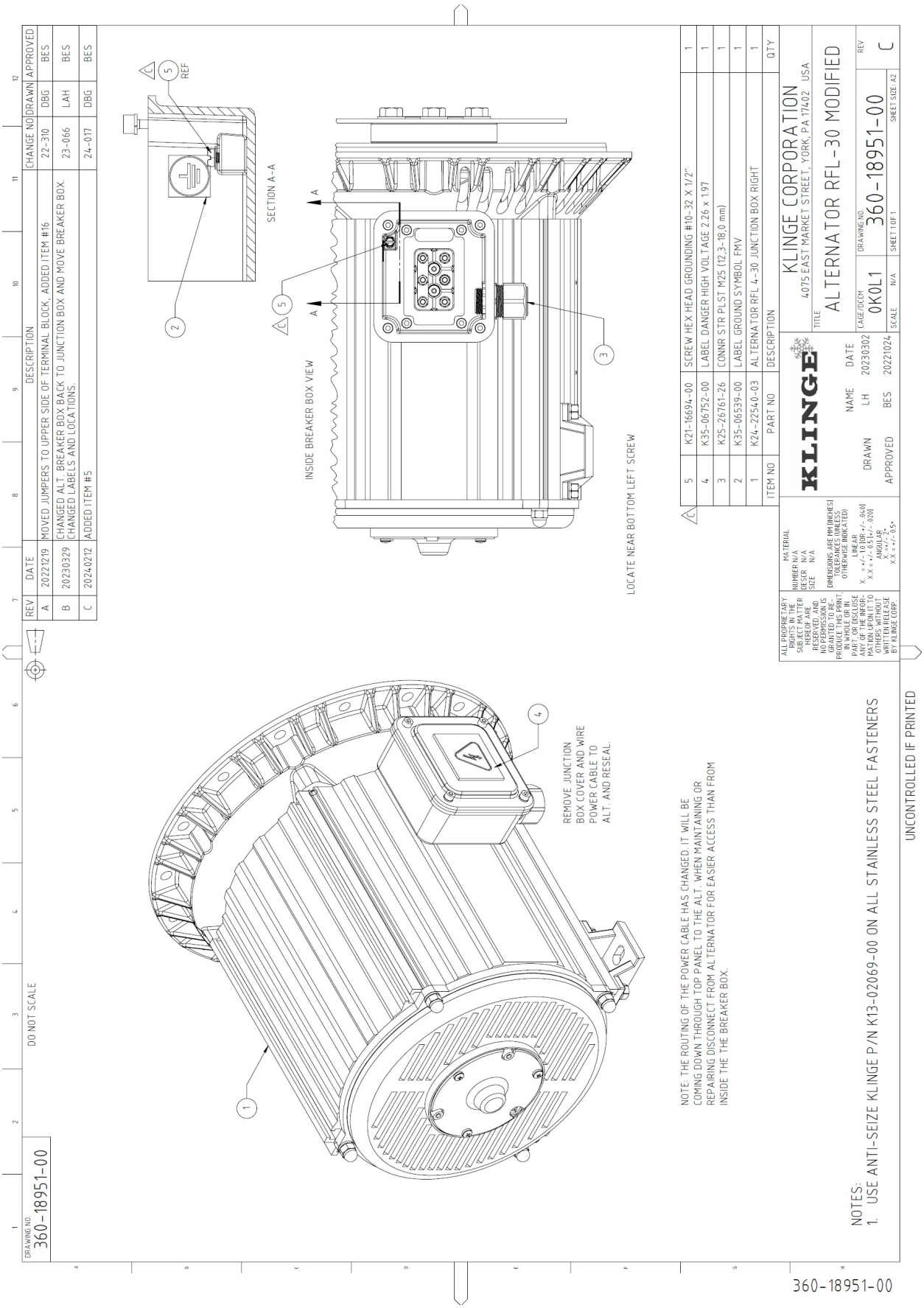
REV | DATE | DESCRIPTION | CHANGE NO | DRAWN | APPROVED
A | 20221219 | MOVED JUMPERS TO UPPER SIDE OF TERMINAL BLOCK, ADDED ITEM #16 | 22-310 | DBG | BES
B | 20230329 | CHANGED ALT. BREAKER BOX BACK TO JUNCTION BOX AND MOVE BREAKER BOX. CHANGED LABELS AND LOCATIONS. | 23-066 | LAH | BES
C | 20240212 | ADDED ITEM #5 | 24-017 | DBG | BES
SECTION A-A
REF
INSIDE BREAKER BOX VIEW
LOCATE NEAR BOTTOM LEFT SCREW
ITEM NO | PART NO | DESCRIPTION | QTY
5 | K21-16694-00 | SCREW HEX HEAD GROUNDING #10-32 X 1/2" | 1
4 | K35-06752-00 | LABEL DANGER HIGH VOLTAGE 2.26 x 1.97 | 1
3 | K25-26761-26 | CONNR STR PLST M25 (12,3-18,0 mm) | 1
2 | K35-06539-00 | LABEL GROUND SYMBOL FMV | 1
1 | K24-22540-03 | ALTERNATOR RFL 4-30 JUNCTION BOX RIGHT | 1
KLINGE
DRAWN LH 20230302
APPROVED BES 20221024
KLINGE CORPORATION
4075 EAST MARKET STREET, YORK, PA 17402 USA
ALTERNATOR RFL-30 MODIFIED
CAGE/DCGM 0K0L1
DRAWING NO. 360-18951-00
REV C
SCALE N/A
SHEET 1 OF 1
SHEET SIZE A2
DO NOT SCALE
DRAWING NO. 360-18951-00
REMOVE JUNCTION BOX COVER AND WIRE POWER CABLE TO ALT. AND RESEAL.
NOTE: THE ROUTING OF THE POWER CABLE HAS CHANGED. IT WILL BE COMING DOWN THROUGH TOP PANEL TO THE ALT. WHEN MAINTAINING OR REPAIRING DISCONNECT FROM ALTERNATOR FOR EASIER ACCESS THAN FROM INSIDE THE THE BREAKER BOX.
NOTES:
1. USE ANTI-SEIZE KLINGE P/N K13-02069-00 ON ALL STAINLESS STEEL FASTENERS
UNCONTROLLED IF PRINTED
360-18951-00

DRAWING NO. 360-18275-10

DO NOT SCALE

REV	DATE	DESCRIPTION	CHANGE NO	DRAWN	APPROVED
A	20251105	ITEM #24 WAS 360-18285-00 QTY 1	25-280	NWB	BES

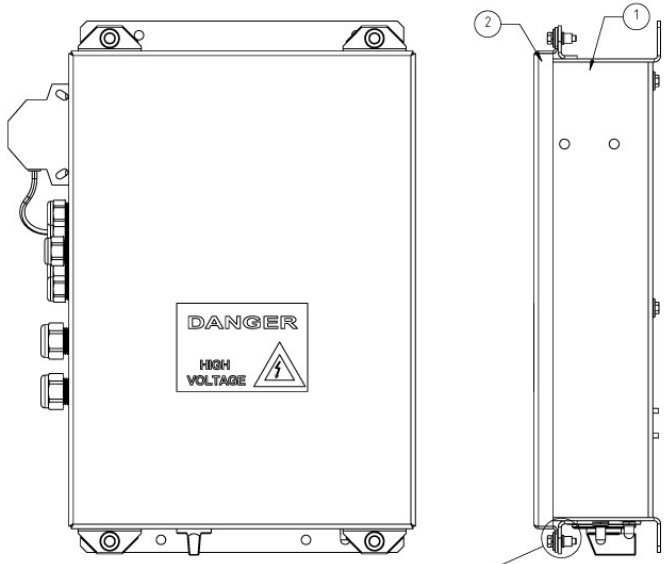

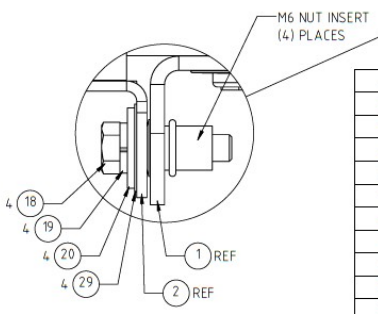

ITEM NO	PART NO	DESCRIPTION	QTY
48	K35-06539-00	LABEL GROUND SYMBOL FMV	1
47	K25-26266-02	SPRING RELAY HOLD DOWN 2 POLE	1
46	K25-26265-02	SOCKET RELAY DPDT 1/8 DIN MTG	1
45	K24-22264-01	RELAY 12 VDC COIL MINI DPDT 3A	1
44	K24-22533-00	TIMER MULTI FUNCT 0.1S TO 24HRS 12-240 AC/DC	1
43	060-13055-31	RAIL MOUNTING DIN #3 x 1.75" LG	1
42	K25-26129-07	CONNR STRAIGHT PLASTIC SHORT 1/2 (.230-.546)	1
41	K21-50421-04	WASHER LOCK SPG SS 4MM	4
40	K21-50401-04	WASH FLAT 4MM	4
39	K21-50103-04	NUT HEX M4 THIN 18-8 SS	4
38	K21-16647-18	SCR FLAT SOC SS M4 X 0.7 X 18 MM	4
37	360-18262-01	HARNESS LAMP PLUG	1

ITEM NO	PART NO	DESCRIPTION	QTY
36	K35-06462-00	LABEL BATTERY CHARGER RESET	1
35	K35-06678-01	LABEL HORN SILENCING	1
34	K24-17239-00	BOOT TGL SW	1
33	K24-18164-00	BOOT CKT BKR 3/8-27 THD CLEAR	1
32	K21-16547-05	WASH FLAT SS M5 5.3 X 15 X 1.2 LARGE OD	2
31	K21-16566-19	RIVET 3/16 (0.0-0.125) CLOSED END SS	4
30	K21-16583-06	NUT LOCK SS M6 X 1 NYLON INSERT	9
29	K21-18510-06	WASHER INSULATED PVC M6	21
28	K21-50224-30	SCREW HEX SS M6 X 1 X 30	5
27	K21-15797-06	WASHER LOCK EXT INT SS 1/4"	1
26	K21-50103-06	NUT HEX M6 THIN 18-8 SS	1
25	K21-50401-06	WASHER, FLAT, STAINLESS STEEL, M6, 6.4 X 12 X 1.6	2
A 24			1
23	K25-26340-02	NUT LK CONDUIT BLK NYL 1/2 NPT	5
22	K25-26129-03	CONNR STRAIGHT PLASTIC SHORT 1/2" (.170-.450)	4
21	K25-26147-01	SEAL RING PLASTIC 1/2"	5
20	K21-16547-06	WASH FLAT SS M6 LARGE OD 18MM	28
19	K21-50421-06	WASHER LK SPG SS M6 18-8	6
18	K21-50224-25	SCREW HEX SS M6 X 1 X 25	6
17	360-18263-01	HORN ASSEMBLY ALARM BOX	1
16	K25-26147-02	SEAL RING PLASTIC 3/4"	3
15	K25-26340-03	NUT LK CONDUIT 3/4	3
14	K25-26129-05	CONNR STRAIGHT PLASTIC SHORT 3/4"(.450-.709)	3
13	060-13055-07	RAIL MOUNTING DIN #3 X 3" LG	1
12	K24-22527-02	BARRIER INTRINSIC SAFE ZENER 6VDC AT 10uA DIN RAIL	1
11	360-15580-01	BATTERY CHARGER MODIFIED 24 VAC 12 VDC 3 AMP	1
10	K25-26941-00	3 POSITION ROTARY CAM SWITCH WITH PANEL MOUNT	1
9	K25-26947-00	SW PB 1NO GREEN ILL 12VDC	1
8	K24-21355-00	SWITCH TOGGLE SPDT #6 SCR	1
7	K24-22330-00	CIRCUIT BREAKER 4 AMP 250 VAC 1 POLE	1
6	K25-26838-00	LAMP ALARM LED	1
5	K28-11107-00	GROMMET ELEC ALARM LIGHT 2.312 MOUNTING HOLE	1
4	360-18284-10	WIRING BOX ACCESSORIES POWER ALARM & GSM	1
3	360-18282-00	PANEL ACCESSORIES POWER ALARM & GSM COMPLETE	1
2	360-18280-10	COVER ACCESSORIES POWER ALARM & GSM COMPLETE	1
1	360-18276-11	BOX ACCESSORIES POWER ALARM & GSM WHITE	1

NOTES:
1. USE ANTI-SEIZE KLINGE P/N K13-02069-00 ON ALL STAINLESS STEEL FASTENERS.
2. ITEM #4 NOT SHOWN, SEE DRAWING 360-18284-10.

ALL PROPRIETARY RIGHTS IN THE SUBJECT MATTER HEREOF ARE RESERVED, AND NO PERMISSION IS GRANTED TO RE-PRODUCE THIS PRINT, IN WHOLE OR IN PART, OR DISCLOSE ANY OF THE INFORMATION UPON IT TO OTHERS WITHOUT WRITTEN RELEASE BY KLINGE CORP.

MATERIAL
NUMBER N/A
DESCR N/A
SIZE N/A

DIMENSIONS ARE MM [INCHES]
TOLERANCES (UNLESS OTHERWISE INDICATED)
LINEAR
X = +/- 10 [OR +/- .040]
X.X = +/- 0.5 [+/- .020]
ANGULAR
X = +/- 2°
X.X = +/- 0.5°

KLINGE

	NAME	DATE
DRAWN	NWB	20241122
APPROVED	BES	20241210

KLINGE CORPORATION
4075 EAST MARKET STREET, YORK, PA 17402 USA

TITLE
BOX ACCESSORIES POWER ALARM & GSM COMPLETE

CAGE/DCCM 0K0L1
DRAWING NO. 360-18275-10
REV A
SCALE N/A
SHEET 1 OF 2
SHEET SIZE A2

UNCONTROLLED IF PRINTED

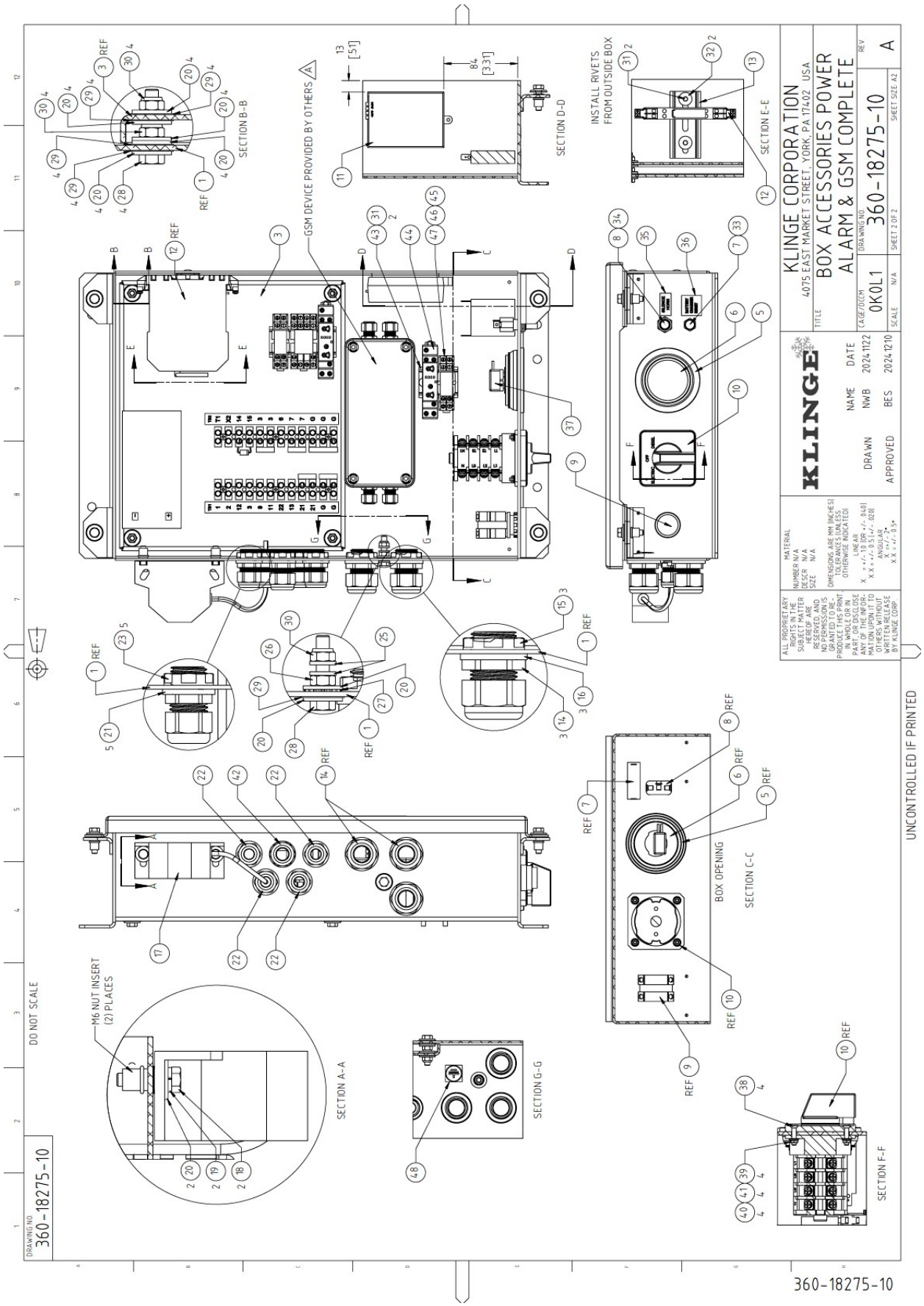
KLINGE CORPORATION
4075 EAST MARKET STREET, YORK PA 17402 USA
BOX ACCESSORIES POWER
ALARM & GSM COMPLETE
360-18275-10
A
SHEET SIZE A2
SHEET 2 OF 2
0K0L1
N/A
KLINGE
NAME
DATE
DRAWN NWB 2024 1122
APPROVED BES 2024 1210
MATERIAL
NUMBER N/A
DESCR N/A
SIZE N/A
ALL PROPRIETARY RIGHTS IN THE SUBJECT MATTER HEREOF ARE RESERVED, AND NO PERMISSION IS GRANTED TO REPRODUCE THIS DRAWING IN WHOLE OR IN PART, OR DISCLOSE ANY OF THE INFORMATION CONTAINED TO OTHERS WITHOUT WRITTEN RELEASE BY KLINGE CORP.
DIMENSIONS ARE MM [INCHES] TOLERANCES UNLESS OTHERWISE INDICATED
LINEAR
X = +/- .19 [OR +/- .040]
X X = +/- .13 [+/- .020]
ANGULAR
X = +/- 2°
X X = +/- 0.5°
DO NOT SCALE
UNCONTROLLED IF PRINTED
SECTION B-B
SECTION D-D
SECTION E-E
SECTION A-A
SECTION G-G
SECTION C-C
SECTION F-F
GSM DEVICE PROVIDED BY OTHERS
INSTALL RIVETS FROM OUTSIDE BOX
M6 NUT INSERT (2) PLACES
BOX OPENING
13 [51]
84 [3.31]
360-18275-10