MODEL TCH-006 & TCH-012

ROAD TANKER AND ISO TANK CONTAINER HEATING UNIT

SERVICE AND PARTS MANUAL

Address: 4075 East Market Street York, PA 17402-5100 USA
Telephone: 717-840-4500 Telefax: 717-840-4501
www.klingecorp.com

MANUFACTURED BY KLINGE CORPORATION

REVISION RECORD

Rev	Description	Date	Approved
A	Updated Section 6.1 Item 1 Part #	2021/09/21	BES
B	Updated Electrical Schematic pg 16	2023/07/21	BES

Serial Numbers Registration

The data plate machine serial number and the ISO container serial number should be reported to engineering@klingecorp.com at the time of installation.

Use of this Manual

By extension, this manual may be used for other combinations of the same equipment, but one would be better served by reference to the particular model, items, and variations. If a copy of this manual is required, contact engineering@klingecorp.com or telephone (USA) (1) 717 840-4500, stating the model number found on the serial number data plate.

The use of this manual is intended for the safe operation of the equipment described. It is therefore reasoned that persons who have the occasion to use this manual have a knowledge of mechanical and electrical systems and components addressed by its' contents. However, efforts have been made to enable persons less familiar with these systems to use this manual.

The unit and the electrical box have serial plates. Quoting either of these with an order for a particular part will allow Klinge Corporation to check the "as built" list to identify a particular origin equipment optional item.

Most external and internal pipework parts are standard commercially available pipe fittings and not covered here. For external pipe fitting, replace like for like, taking care to replace stainless steel with stainless steel.

Suggestions as to improvement in content and format are welcome and should be addressed to engineering@klingecorp.com . Corrections and improvements will be included on dated revisions.

Contents

SECTION ONE - GENERAL DESCRIPTION, INSTALLATION & OPERATION

The TCH units are 6 kW or 12 kW electrical heaters specifically designed to fit ISO beam and frame tanks with the mounting available to fit either side or end rails.

1.0 Nomenclature

Convention dictates we label the rear of the tank container as the end with the discharge valves, or the end with the data markings. Our norm is to mount the unit on the right-hand side when viewed from the front. However, it can go on either side, but care must be taken to match the unit with the heating coil circuits and connections. If space allows, it may go on the rear sill and be adjacent to the traditional location of the steam tubes.

For particularly hazardous cargos, two units can be mounted - one either side - giving 100% unit redundancy as security for the cargo integrity. The text in this manual assumes there is one machine fitted on the right-hand side.

The control box is normally mounted on the right-hand side of the rear of the container, that is, on the left viewed from the rear.

Various liquids may be used to transfer the heat from the electrical heater to the cargo. To avoid the repetitive use of options in this manual, the word glycol is used throughout as synonymous with all types of liquid heat transfer material.

1.1 Heating System

The TCH unit is an electric heat only system with the heater lying horizontally beneath the pump assembly.

It is designed for use with ethylene glycol, propylene glycol, or synthetic oils where different cargos dictate a different heating medium. Ethylene glycol is commonly used with most chemicals. Propylene glycol is used with foods and synthetic oils are used for high temperature cargos.

Basic equipment associated with the TCH unit includes: a circulating pump-assembly and a 6 kW or 12 kW heater. A detailed description of the system is located in Section 2.

An electronic thermostat is fitted to the TCH unit. The thermostat is then linked to the electro-mechanical system to control operation of the TCH.

This adjustable thermostat controls the temperature of the cargo in the tank. The cargo probe monitors the cargo temperature. A second probe monitors the glycol temperature and provides a limit on the heat that may be applied to the tank – this feature prevents the heater from introducing excessive heat to the system.
The unit is compact and lightweight, fitting neatly alongside or at the rear of the tank container, either; on the bottom side rail of a frame tank or by using brackets, it can be attached to the belly of a beam tank or road tanker.

The unit comes with a sub-frame bracket so that the heater and pump can be quickly dismounted and remounted as a unit – leaving the sub-frame bracket welded to the tank structure.

Connection to the tank's coil system is customized for each tank container design with the necessary components either supplied as a kit of loose items or supplied by the tank builder. Usually, for both new and retrofit, they come as a combination of a kit of the specialized parts supplied by Klinge and common items supplied by the builder. The pump and heater come insulated. The pipes to and from the ISO tank must be insulated by the owner, along with the remainder of the ISO tank.

1.2 Circulating Pump

The circulating pump is a close-coupled centrifugal pump and motor. The circulating pump assembly is low maintenance with sealed bearings supporting the motor. The fluid being pumped through it provides lubrication for the pump. By loosening the band clamp on the pump inlet and disconnecting the coupling on the outlet pipe, the pump and the base can be removed as a complete assembly from the sub-frame. It is common practice for the tank builder to include a flanged joint in the pipes to and from the assembly. This allows the pump to be dismounted without having to disturb or remove the whole piping assembly. Caution - see Section 1.3.6 for pump rotation and wiring.

1.3 Installation Procedures

Installation of the TCH is designed to be accomplished with relative ease. On frame tank containers, the unit is welded or bolted directly to the lower or bottom rail on either side of the ISO tank. On road tankers and beam tank containers the installation is accomplished by using brackets, which can be provided, allowing the unit to be attached to tank stiffener rings. In either case, a drawing will accompany each new installation showing the attachment assembly for the TCH.

Provision must be made for the glycol connections, connecting the power and signal cables, isolation of dissimilar metals, and electrical earthing (grounding) the unit to the frame of the tank.

1.3.1 Typical Installation Procedures, Frame or Beam Tank Container

The following is a general procedure. Use the installation drawing provided as a guide for specific locations and fittings for the individual installation.

For general design purposes, there is a general installation set of drawings that can be emailed on request.

1.3.2 Preparation of Frame Mounting Surface

Prior to final painting, the holes and brackets to hold the machine, and the threaded bolt to attach the earth strap, should be made and then fully painted and allowed to cure.

1.3.3 Installation onto the Rear Frame

Mounting the unit to the bottom rail of the tank frame requires an installation kit (360-12828-10), supplied by Klinge, which includes a mounting base that is welded to the frame rail. The TCH is then bolted to the mounting plate in three places with M10 bolts.

1.3.4 Installation Procedures, Beam Tank Container

An alternative option would be to attach the heater unit to the ISO tank at an existing stiffening ring or a short section of additional stiffening ring.
Our interpretation of ASMEE VIII allows for this, but the tank builder or owner would have to seek class approval for the applied load and possibly for the effect of differential thermal expansion and vibration.

Care must be taken in detailing the interface components, not only to take care of the resulting forces, but also to take into consideration:

- differential thermal expansion between the tank and the machine,
- thermal insulation (and thermal bridging between components attached to the tank through the insulation),
- the electrolytic corrosion of dissimilar metals, and
- the requirement to provide a common earth throughout the whole of the tank and its components.

1.3.5 Installation of the Control Box

Mounting of the control box requires the tank builder to provide two brackets, each with two holes for bolting the aluminum control box to the frame.

We ask that an electrolytic barrier, such as a 1 mm thick gasket of synthetic rubber or plastic, be placed between the steel bracket of the container and the aluminum control box.

The main power SO cable is suitable for installation without conduit or cable tray, but it must be secured in a workmanlike manner to the tank structure.
The cable to the pump is sealed at the pump end and the free end is marked to identify connections necessary in the control box. Installation consists of fitting the cable through the cable gland and making the connection of the three wires and an earth to the terminal strip.

The control box includes a current sensing device that reverses the polarity of the 3-phase supply to the motor so that it always runs in the correct direction regardless of the ship or other power source's phase orientation.

1.3.6 Pump wiring and rotation

The pump is marked with an arrow showing rotation. The correct rotation of the pump can be seen when viewing the pump from the fan end. Correct rotation is clockwise.

The direction of rotation can be seen by observing the fan inside the fan cover. The direction of rotation can be seen when the pump is starting or stopping. In poor light or if the fan cannot be seen when the motor is slowing down, it is possible to use a plastic wire tie wrap – straw or short length of wire to feel the direction of the fan as it slows.

When connected as marked the motor should run in the correct direction. However, on first making

the electrical connection or servicing the pump, the rotation must be checked. If running the wrong way - two of the three wire connections must be reversed. When correct rotation is complete, the heat shrink markers should be shrunk on to the appropriate cable wires.

1.4 Glycol System

1.4.1 The Expansion Tank

This unit requires a separate, externally mounted, expansion tank. This is equivalent to the expansion tank found next to the radiator in most modern cars.

Klinge can supply a bolt-on expansion tank or the builder can fabricate one as part of the tank frame. The Klinge supplied expansion tank is generally as shown in Section 6 of this manual but can be customized to fit the frame and walkway detail of container.

It is very simple, and we suggest the builder fabricate and install it rather than have to integrate a US made tank. Some tank builders use a proprietary plastic truck expansion tank.

The tank should be approximately 2-gallon capacity, built to fit high up on the frame with access from the walkway for filling purposes. It should have a “no pressure” radiator-cap type filling port and a single large bore “in and out” port connected to the glycol system. It is not a pressure vessel. The cap, if of the pressure type, should have a small vent hole drilled in it or a small hole drilled in a high point in the filling pipe of the expansion tank.

The pipe from the expansion tank to the unit may be clear plastic but must be of large bore, minimum 1.5 inches (40 mm) and would ideally be piped under the insulation for most of its routing.

The pipe may be wire re-enforced plastic or similar as long as it can withstand the extremes of the operating temperature.

1.4.2 Cleanliness of the glycol system

When made new, heating systems are typically coated with oil, grease, or protective film during fabrication. Welding byproducts, flux and scale that would not normally cause a problem with a steam system can cause a problem with the circulating pump of a glycol system. Thoroughly cleaning a new system is therefore important.

A solution of 1 to 2 % trisodium phosphate can be used with water for flushing the cooling pipes. The system volume can be calculated at this stage by metering in the cleaning material.

The cleanliness of the system cannot be overstated.

This cleaning should be completed before connecting the TCH unit.

We suggest that a gauze or muslin cloth be used to filter and observe the output of the cleaning medium - use the lack of returning dirt as a guide to cleanliness.

Important Note - as it is an inherently closed loop low pressure system, the unit purposely does not have the restriction of an in-line filter in the glycol line. It depends on the heating

system being cleaned at the initial charge.

1.4.3 Venting

To initially charge the system and release trapped air, the heating system coils will require vents. The pump is not self-priming, however, with sufficient head of liquid from the initial filling the pump may be run intermittently to assist in venting the system.

Two types of vents can be provided;

- A brass valve, K22 06966-00 available through Klinge, designed to automatically vent (supported with a hand isolation valve).
- Schrader valves.

Our preference is for the Schrader valves - being automotive parts they are readily available world-wide. Always use a metal cap in conjunction with the valve.

Klinge can supply the vents, but we look to the installer to provide the pipes through the insulation.

Without full details of the heating coils, it is impractical to suggest how many vents are required. However, in practice, one per high point on the coils would suffice.

1.5 Installation Checkout Procedure

In order to ensure that the TCH will operate as designed and provide trouble-free operation, it is important that this checkout procedure be completed.

1.5.1 Circulating System Charging Procedure

The circulating system can be charged with either propylene or ethylene glycol or synthetic oils. Refer to paragraph 3.3 for details of system charging.

1.5.2 Operational Testing

Operational testing should be completed on the initial installation. Complete Section 1.6 and comply with paragraph 3.1 in order to perform a complete operational test.

1.6 TCH Standard Operating Procedures

1.6.1 Pre-Starting Check

The items that should be checked are:

- Visually inspect unit for physical damage. Look for leaks.
- Check mounting bolts and ensure that they are not loose.
- With the power disconnected, open the electrical control box and inspect it to ensure that all connections are tight and electrical components are secured properly.
- Check that control box door gasket seals properly.

Connect the main power plug into a receptacle rated at 480VAC to supply power to the unit. Check to ensure the circuit breakers are in the "ON" position.

NOTE: The TCH unit should be started using the function test (see paragraph 1.6.4.) to ensure the thermostat will function properly.

1.6.2 Starting the TCH

Start the unit by placing the "ON/OFF" switch in the "ON" position. Following the instructions on the door, adjust the thermostat temperature to the desired “set point” temperature and allow the unit to run.

At a “pre-trip inspection” or if the tank has been stored for a long time, check the glycol level and add glycol as necessary. During the initial run time, vent the various valves either automatically or by depressing the Schrader valve. Remember to replace the cap.

1.6.3 Temperature Selection

Once a set point is selected, the thermostat governs the cycles of the TCH based on this control point. The default temperature indicated on the display is cargo probe temperature. To view the glycol probe temperature, hold the “TEST” switch down.

The temperature response of the system will be determined by proper location of the temperature sensing probes.

The system is adaptable to customer requirements. The customer determines the location of the thermo-well, but in general, for tanks designed to carry full loads, the probe location is 1/3rd up the height of the liquid and some distance from any heating coils.

For partitioned tanks able to carry less than full loads, the probes should be mounted in a lower position to be covered by the minimum liquid likely to be carried.

The thermostat allows for two control probes. One probe is in the cargo well (cargo probe) and one on the heater tank (glycol probe).

Creating a Temperature Set Point:

1. Pressing the **UP (▲)** or **DOWN (▼)** key causes the display to show the current set point.

2. After the current set point is displayed, each pressing of one of these keys will increment or decrement the display by one whole degree.

3. Holding a key pressed will cause the display to change rapidly.

4. Simultaneously pressing both keys causes the current set point to be saved. This set point will be used until another set point is chosen.

5. The display automatically returns to normal mode, displaying the cargo probe temperature, approximately five seconds after the last key press.

6. If the unit is turned OFF or power to the unit is lost, the set point will be retained in the thermostat's memory.

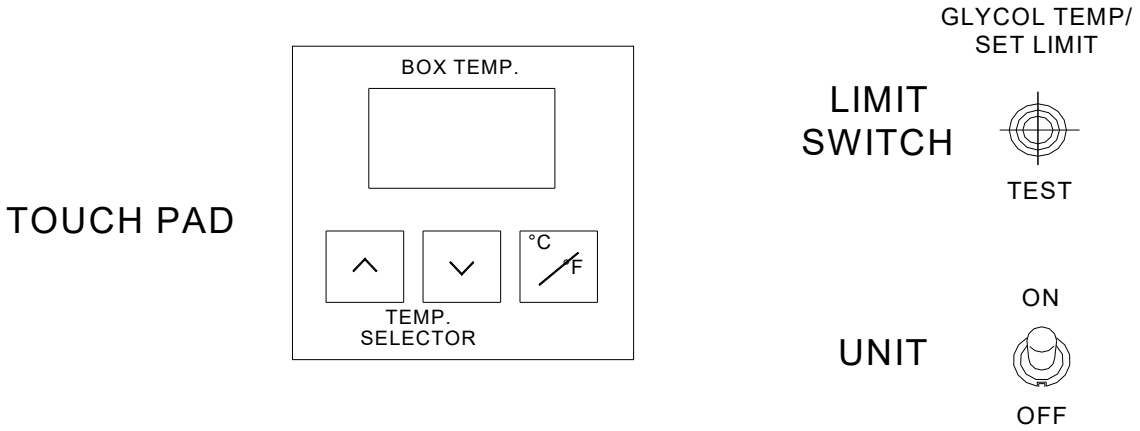

Changing Temperature Mode:

1. The thermostat can operate in either degrees Centigrade **(C)** or Fahrenheit (**F**).

2. Pressing the **C/F** key causes the display to indicate the current mode. This is indicated by a **C** or **F** in the right character of the display. The right most decimal point in the display is also illuminated when in **F** mode.

3. Each pressing of the **C/F** key causes the mode to change.

4. After selecting °**C** or °**F**, pressing either the up or down key will cause the currently selected mode to be saved and the display will immediately return to normal mode.

5. The display automatically returns to normal mode approximately five seconds after the last key press.

The glycol safety limit

The glycol safety limit is a functional setting to limit local overheating of the cargo as well as prevent damage to the system. In order for the circulating glycol to heat the cargo, it must be at a higher temperature than the cargo. This is not normally a problem, but for some cargos, the ideal temperature is as near to its critical upper temperature as is practical. If this is the case, you may set the glycol limit at 5. Then the control will allow the unit to deliver glycol at a temperature no higher than 5 degrees above the set point.

Setting the glycol safety Limit

Hold the “TEST” switch down while entering a glycol safety limit using the touch pad as described above for creating a temperature set point.

1.6.4 Function Test of the Electronic Thermostat Assembly

To initiate the function test of the electronic thermostat, simply hold the “TEST” switch down and turn the unit "ON”. All the LED indicators will flash, and the unit will proceed into the function test. When the function test is completed, the TCH will continue to operate normally. A complete explanation of the function test can be found in Section 3.5.

After completion of the function test (approx. one minute), check amperage of the glycol pump and heater. Do not exceed the amp values on the electrical schematic. At the same time, check all indicating LEDs on the thermostat and direction of rotation of glycol pump cooling fan.

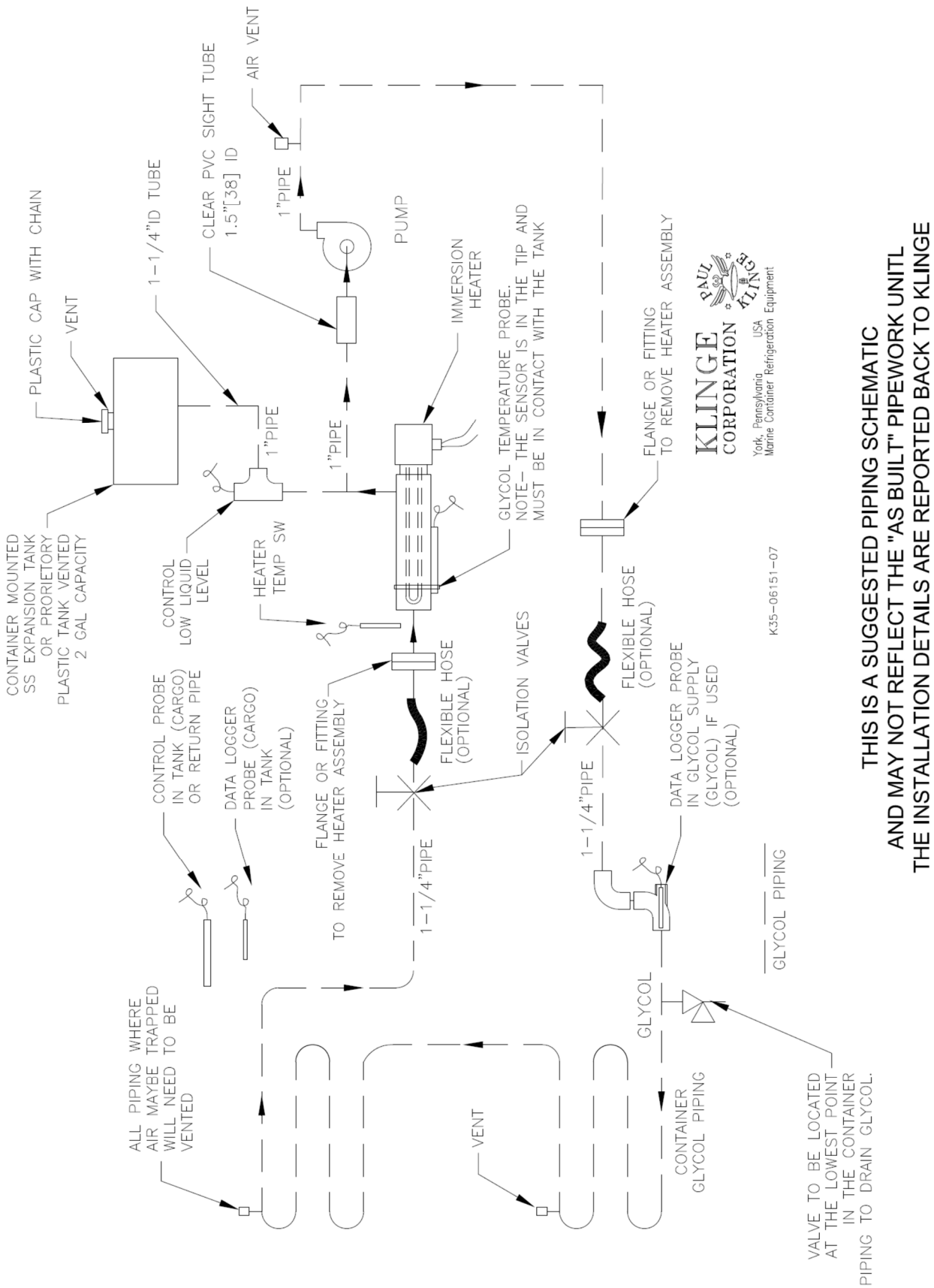
AIR VENT
CLEAR PVC SIGHT TUBE
1.5"[38] ID
1"PIPE
PUMP
1-1/4"ID TUBE
PLASTIC CAP WITH CHAIN
VENT
IMMERSION
HEATER
GLYCOL TEMPERATURE PROBE.
NOTE- THE SENSOR IS IN THE TIP AND
MUST BE IN CONTACT WITH THE TANK
FLANGE OR FITTING
TO REMOVE HEATER ASSEMBLY
1"PIPE
1"PIPE
CONTAINER MOUNTED
SS EXPANSION TANK
OR PRORIETORY
PLASTIC TANK VENTED
2 GAL CAPACITY
CONTROL
LOW LIQUID
LEVEL
HEATER
TEMP SW
FLEXIBLE HOSE
(OPTIONAL)
ISOLATION VALVES
FLEXIBLE HOSE
(OPTIONAL)
CONTROL PROBE
IN TANK (CARGO)
OR RETURN PIPE
DATA LOGGER
PROBE (CARGO)
IN TANK
(OPTIONAL)
FLANGE OR FITTING
TO REMOVE HEATER ASSEMBLY
1-1/4"PIPE
1-1/4"PIPE
DATA LOGGER PROBE
IN GLYCOL SUPPLY
(GLYCOL) IF USED
(OPTIONAL)
GLYCOL PIPING
GLYCOL
ALL PIPING WHERE
AIR MAYBE TRAPPED
WILL NEED TO BE
VENTED
VENT
CONTAINER
GLYCOL PIPING
VALVE TO BE LOCATED
AT THE LOWEST POINT
IN THE CONTAINER
PIPING TO DRAIN GLYCOL.
KLINGE
CORPORATION
PAUL KLINGE
York, Pennsylvania
Marine Container Refrigeration Equipment
USA
K35-06151-07
THIS IS A SUGGESTED PIPING SCHEMATIC
AND MAY NOT REFLECT THE "AS BUILT" PIPEWORK UNITL
THE INSTALLATION DETAILS ARE REPORTED BACK TO KLINGE

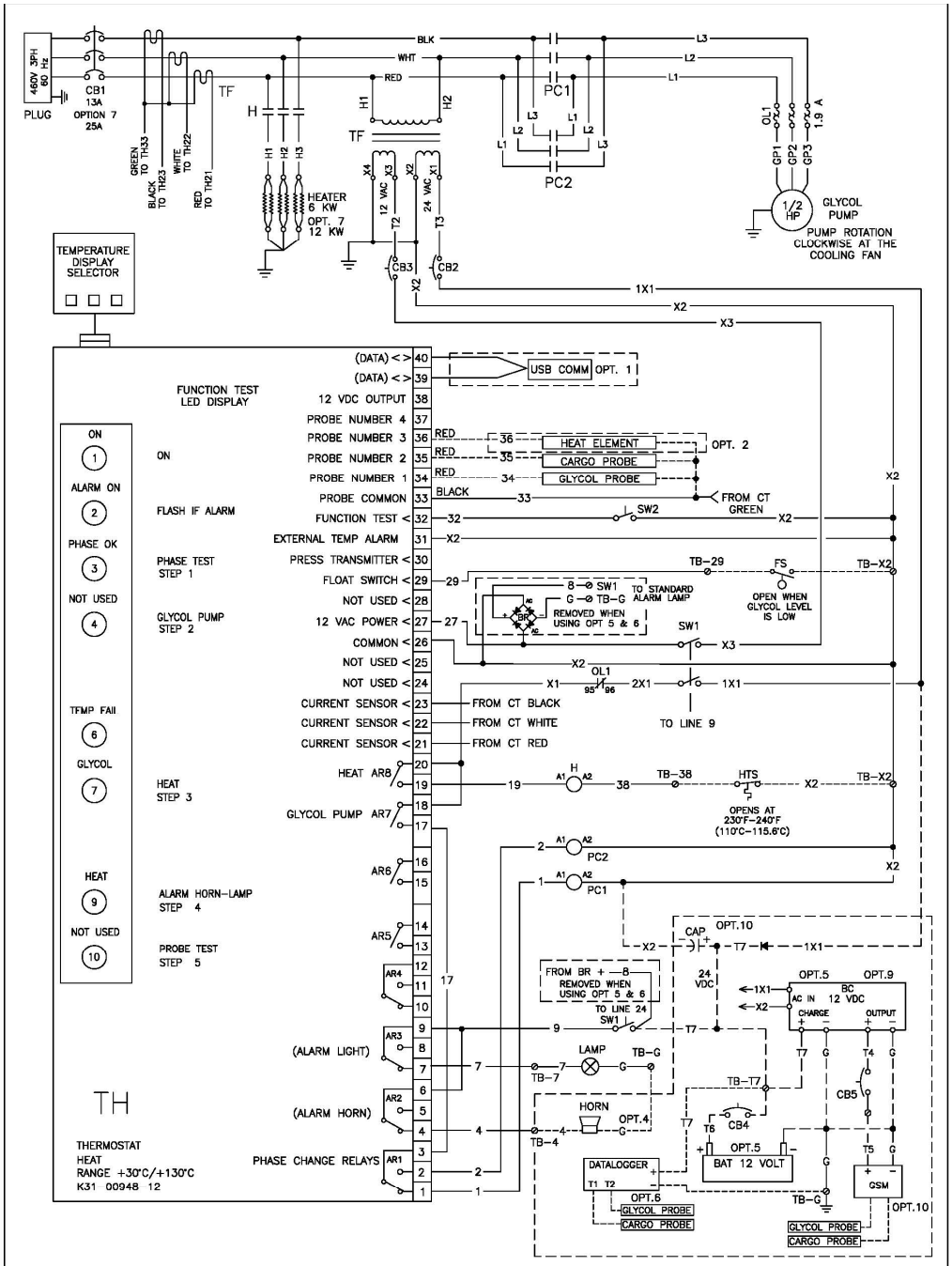

LEGEND

BAT 12VDC BATTERY
BC BATTERY CHARGER
BR 12V BRIDGE RECTIFIER
CB1 CIRCUIT BREAKER 13 A (MAIN POWER)
CB2 CIRCUIT BREAKER 4A (24VAC)
CB3 CIRCUIT BREAKER 4A (12VAC)
CB4 CIRCUIT BREAKER 4A (12VDC)
CB5 CIRCUIT BREAKER 3A (12VDC)
CT CURRENT TRANSFORMER (PHASE 1-2-3)
GP GLYCOL PUMP
H HEATER CONTACTOR
HTS HEATER TEMPERATURE SWITCH
FS LOW LIQUID LEVEL FLOAT SWITCH
OL1 PUMP MOTOR OVERLOAD
PC1 PHASE CHANGING CONTACTOR NO.1
PC2 PHASE CHANGING CONTACTOR NO.2
SW1 UNIT ON/OFF (3P)
SW2 FUNCTION TEST / SET LIMIT SWITCH
TF TRANSFORMER 460 – 17/29 VAC
TB TERMINAL BLOCK IN ELECT. BOX
TH THERMOSTAT (MICROPROCESSOR)
CAP CAPACITOR FOR 24 VDC OUTPUT (OPT 9)

OPTIONS

OPTION 1 – DATA LOGGING PC COMMUNICATION
OPTION 2 – HEATER PROBE
OPTION 3 – SATELLITE TRANSPONDER (NOT SHOWN)
OPTION 4 – ALARM HORN
OPTION 5 – 12VDC BATTERY AND CHARGER
OPTION 6 – EXTERNAL DATA LOGGER
OPTION 7 – ELECTRIC HEATER 12KW
OPTION 8 – SATELLITE TRANSPONDER (NOT SHOWN)
OPTION 9 – VOLTAGE REGULATOR WITH 12VDC FOR GSM POWER
OPTION 10 – 24 VDC POWER FOR SAVVY OR IMI – CANNOT BE USED IF BATTERY CHARGER OR VOLTAGE REGULATOR IS USED

WIRING INSIDE ELECTRICAL BOX
WIRING OUTSIDE ELECTRICAL BOX
OPTIONS
⊘ TERMINAL ACCESS POINT

KLINGE

4075 East Market Street, YORK PA 17402 USA
For technical assistance:
Web portal https://klingecorp.com/request-service
Email technical@klingecorp.com
Telephone +1-717-840-4500
For spare parts please email spares@klingecorp.com

MODEL TCH

ELECTRICAL SCHEMATIC WITH OPTIONS

REV E K35-06006-26

SECTION TWO – DETAILED FUNCTIONAL DESCRIPTION

2.1 Circulating System Operation

The circulating system is designed to be compatible with either glycol or synthetic oils. The heat transfer medium used in the system is decided mostly by its application. The circulating system consists of a close-coupled centrifugal pump and motor assembly, a relief valve, an expansion tank system, an immersion type heater and associated piping enabling connection to the tank container.

The pumped fluid lubricates the close-coupled pump assembly as it passes through the assembly. Maintenance is reduced on this unit by using seal bearings and eliminating alignment requirements between pump and motor. The pump motor is rated at ½ horsepower and capable of pumping fluid at temperatures of 120°C (248°F).

The expansion tank system provides a place for the expansion of the heat transfer medium during temperature changes and on a limited basis, acts as a storage area for additional coolant.

The initial section of the circulating system is included with the machine including an inline sight glass formed by a short length of flexible plastic hose. The inlet and outlet pipes enable the operator to make connections from the tank coil system to the TCH using standard flexible hose connections or solid pipe work.

2.2 Electronic and Electrical Operation

2.2.1 Electronic Thermostat

This device contains all circuits necessary to control the pumping and heating functions required to maintain the desired temperature. The unit's operation is based on signals received from the 2 probes (cargo and glycol) and the 2 user defined settings (set point and glycol safety limit) entered into the display panel.

It is designed to operate in ambient temperature of -40°C (-40°F) to 50°C (122°F). It will control temperature settings (set point) of 30°C (86°F) to 130°C (266°F) to an accuracy of 0.1°C (0.2°F).

2.2.1.1 LED Indicators

The narrow edge of the thermostat contains (8) LED indicators. These LEDs serve a dual purpose.

1. During normal operation, the label on the front of the thermostat indicates the operating status of the unit.
2. The side label is used for the function test only. It indicates the function being tested during the test.

2.2.1.2 Inputs

The Input signals to the device are:

1. The glycol and cargo temperature probes.
2. Set point

3. Glycol safety limit setting
4. Signal from TEST switch.
   a. Holding it down to enable glycol safety limit setting or to view glycol probe temperature.
   b. Holding it down (then turning "ON-OFF" switch to ON) to initiate a Function Test

2.2.1.3 Outputs

Output signals from the device are by means of 8 relays. 4 relays are single pole single throw normally open and 4 are single pole double throw. The 2 outputs used in this system are:

1. Current transformer / glycol pump (AR7)
2. Heat contactor (AR8)

Each output relay has a small red LED mounted on the circuit board adjacent to the relay to indicate if the relay is energized. These LEDs are visible only from the side of the device and are for diagnostic purposes only.

Relay AR7 energizes the current transformer which in turn energizes the necessary phase contactor to start the pump (which runs all the time) in the proper direction.

Relay AR8 controls the heat contactor.

2.2.1.4 Controlling Sequence

Temperature Falling:
Heat cycles on when cargo probe senses temperature 0.5°C (0.9°F) below the set point. When the heater goes off, there is a 1 minute delay before it will restart.

Temperature Rising:
Heat cycles off when cargo probe reaches set point.

2.2.1.5 Other functions

1. After reaching the set point, if the temperature varies more than plus or minus 2°C (3.6°F) for more than 120 minutes, the alarm LED will light, and the temperature failure LED will light.
2. The alarm LED indicator is reset by turning the control system power OFF or by the temperature reaching the set point.

2.2.2 Circuit Breakers

Circuit breaker 1 (CB1)
A 13-amp 3-phase circuit breaker resets manually and protects the entire unit against overload.

Circuit breaker 2 (CB2)
A 4-amp single phase circuit breaker protects the 24-volt control circuit in case of possible short circuits. Reset manually.

Circuit breaker 3 (CB3)

A 4-amp single phase circuit breaker protects the 14-volt control circuit in case of possible short circuits. Reset manually.

2.2.3 Contactors

Heater (H)
This is a 3-pole 480-volt direct-in-line contactor with a 24-volt operating coil. It energizes the heater element and is energized by the microprocessor thermostat. The 24-volt coil circuit can be interrupted by the Heater Overload (OL2).

Phase contactors (PC1 and PC2)
There are two 3-pole 480-volt direct-in-line contactors with 24-volt operating coils. These connect the power to the pump motor. One of these contactors, either PC1 or PC2 is energized by the phase sensor.

2.2.4 Current Transformer (CT)

When the unit's ON/OFF switch is in the ON position, power feeds through the current loops. When the thermostat is energized, it scans the phasing of the input power and will allow either phase changing contactor PC1 or PC2 to become energized to ensure the correct rotation of the fans.

2.2.5 Transformer

Transformer 230VA 400V 24V /14V (T1)
The primary coil is tied into the line between the 25-amp circuit breaker and the line starters. The secondary coil supplies 24 volts AC for coil operation and 14 volts AC for the control circuit.

2.2.6 Overloads

Glycol Pump Overload (OL1)
It protects the pump motor in an overload condition, trips at 1.9 A.

2.2.7 Safety cutout components

Low-Level Glycol Switch (LLS)
This float switch protects the system from low glycol level should a leak or a broken hose occur.

Low-level Timing Relay (LTR)
The timing relay receives the signal from the low-level float switch and upon a 15 second (adjustable) delay the relay will turn the pump and heater off. The delay prevents unnecessary unit shutdowns, by the float dropping caused by air passing by the float switch, on its way to be vented into the expansion tank.

Pump Alarm Relay (PAR)
The pump alarm relay is energized by the pump overload OL1. This relay will turn the pump and heater off.

SECTION THREE - GENERAL MAINTENANCE REQUIREMENTS

3.1 Pre-Trip Maintenance

Pre-trip maintenance is necessary for the operator to feel confident that the TCH heating system will perform adequate cargo handling. Pre-trip maintenance is simple to perform and if conscientiously applied will enhance the reliability of the unit. Routine pre-trip maintenance will also add to the service life of the unit. Below is a representative form for pre-trip maintenance.
It is suggested an in-house quality control form be created for local circumstances, reporting procedures, etc.

3.2 Safety Precautions

A thorough study of the electrical diagram is recommended before any work should begin on the electrical system. Understanding the voltages present and the location of components within the electrical system can avoid the potential for a life-threatening injury.

Always wear the appropriate personal protective equipment when working on the system. Ensure that others around you also wear appropriate protection. Goggles, face shields, and gloves should be available to and used by the technician to avoid injury.

3.3 Circulating System

General maintenance consists of purging, venting, and filling when operations require that it be done. Be sure that when handling the heat transfer medium that there is adequate personal protective equipment and spill prevention is in place. Read and act within the safety instructions supplied with heat transfer medium. It is important to maintain the concentration of the heating medium. The normal condition for both ethylene and propylene glycol is a 50/50 mix with clean water. The concentration/mix has a direct relationship to density and can be measured directly or indirectly with a suitable hydrometer.

The circulating system of the TCH is essentially a closed-loop system that is open to the atmosphere but only at a small vent hole in the expansion tank.

3.3.1 Initial Filling Circulating System

First read Section 1.4.2, on cleaning the system.

The TCH Unit has one common open line to and from the expansion tank.

The system is charged by first filling the expansion tank and opening a vent, or vents, in another part of the circulating system.

It may be an advantage to first introduce liquid from a number of temporary openings

in the system.

With the TCH system, it is not necessary to break the vertical pipe, but it may assist if liquid can be introduced into the system from more than one point. With the vents open or temporarily removed, additional liquid may be added to the expansion tank. Once the liquid can be seen in the plastic sight glass, the pump may be operated intermittently. Additional liquid may be added to the expansion tank. With a column of liquid in the vertical pipe from the expansion tank, the pump will be self-priming but may quickly displace the volume in the vertical pipe. Stopping the pump, adding liquid to the expansion tank, re-running the pump for a few seconds stopping it and adding more liquid may have to be repeated a number of times until liquid fills the majority of the system. Once this condition is achieved, the unit should be self-priming and will purge itself of entrapped air.

3.3.2 Air Purge and System Venting

Automatic type
The air purge and vent installed in the circulating system is equipped with a flapper style valve assembly that automatically varies the opening of the vent port as it allows air to escape. This variety in the flapper will handle large and small volumes of air. As the automatic valves tend to "leak" a little when the tank is subject to road vehicle vibration, the automatic vent valves require a shut-off valve in series with the automatic valve. This negates the automatic feature of the valve but does provide a convenient way of venting the system at a service call, such as a pre-trip inspection.

Schrader valve type
These small automotive tire type valves require the cap to be removed, and the center pin of the valve to be depressed as in a pneumatic tire. Always replace the metal cap and the outer cover.

3.4 Hi-Pot Testing

Hi-Pot testing is done to determine if there is a significant increase in current leakage in motor windings. High current leakage can, in most cases, indicate a breakdown in motor insulation resistance.

3.4.1 Circulating Pump Motor

Hi-Pot testing of the circulating pump motor will aid in detecting problems in the motor windings that could lead to failure of the circulating system. This motor is normally dry and free of contaminants that could increase electrical leakage. If a high current leakage condition is measured, it could indicate a failure of the motor.

3.5 Thermostat Function Test (Label on the right side of the thermostat)

During the function test, the microprocessor will first flash all indicator LEDs and then proceed through the functions step by step.

To initiate the function test, hold the "TEST" switch down and switch the unit ON/OFF to

ON. The microprocessor will flash all indicator LEDS and then proceed through the function test. There are (8) steps in the function test. However, only (4) are used on this unit. The LED will light to indicate the function being tested.

These steps are:

1. Flash all indicator LEDS

2. Energize circulating pump contactor (LED 2 will light, or flash if there is a problem with thermostat)

3. Not used

4. Not used

5. Energize heat contactor. (LED 5 will light, or flash if there is a problem with thermostat).

6. Cargo probe (LED 6 will light, or flash if the probe is open or shorted.)

7. Cargo probe (LED 7 will light, or flash if the probe is open or shorted.)

8. Not used

SECTION FOUR - TROUBLE SHOOTING

This section is intended to aid the technician in determining the cause of a malfunction of the TCH.

4.1 Electronic Thermostat

The thermostat is mostly solid state and therefore has a high degree of reliability.
If the thermostat is suspect first check:

- that probe is in close contact with the point being measured
- the system has glycol in it and the system has been vented
- does the thermostat perform a successful function test
- check that no external wires are loose or shorted out

The controller cannot be repaired or reprogrammed in the field, but a core replacement price is offered for a unit returned that can be repaired. Contact spares@klingecorp.com for a replacement.

4.2 Circulating System

The circulating system is simple in design and operation.
Because the system is designed as a closed system there is no requirement for an inline filter.
If, however, on initial charging of the system, or in service, the system is contaminated with solid matter it will restrict the flow and therefore the capacity of the system.
If this happens the system may be reverse flushed with high-pressure, high-volume liquid such as wet steam.

The pump, being a moving part, has a service life equal to an estimated 4 to 5 years life of regular service in one-way trade. There is a replacement kit of bearings and seals for in-service replacement. Quote the serial number of the unit when ordering the in-service kit.

Refer to the fault logic decisions for trouble shooting a malfunction.

4.3 Electrical System

The electrical control system for the TCH is rugged and compact.
Individual models will vary depending on the options adopted. For further detail refer to the circuit diagram attached to the inside of the control box or in this manual.

ELECTRONIC THERMOSTAT FAULT LOGIC

DURING FUNCTION TEST Use label on the side of the thermostat.

All Lamps Flash	Function test starting
Probe LED Flashes	Probe is open or shorted
	Temperature selector is open or shorted

DURING OPERATION Use label on front edge of thermostat.

Green "ON" lamp lit	Thermostat is energized
Red "ALARM ON" lamp lit	One of the alarms is occurring. Check further.

POWER SYSTEM FAULT LOGIC

Malfunction	**Probable Cause**	**Recommended Corrective Action**
No Power to Unit	Power plug not connected	Connect power plug
	Source not available	Verify that the power source is available
	Loose cable connections	Check cable connections
Unit Will Not Start	Tripped CB1 or CB2	Reset circuit breakers
	No control voltage present at T1	Check primary side for presence of 460VAC at T1. If no voltage present refer to "No Power to Unit"
		Check all electrical connections for tightness. Re-check primary voltage.
		Replace defective T1.
	Float switch open	Check the switch function, should be closed, Check air pocket or low glycol.

CIRCULATING SYSTEM FAULT LOGIC

Malfunction	**Probable Cause**	**Recommended Corrective Action**
Pump working but no flow	Heating medium too viscous	Check concentration of heating medium
	Pump rotation	See section 1.5.5 for correct rotation
Sight tube not clear	Heating medium contaminated	Test sample
	Tube deteriorated	Replace tube

4.4 Alarm Codes

Alarm LED indicators are reset if control system power is turned OFF.

Note: If the display would display a "P" number, this indicates that you have accidentally entered the Configuration Menu. In order to prevent accidental changes please turn the unit off and back on.

ALARM CODE	ALARM NAME	ALARM CONDITION	ALARM CLEAR	SUGGESTION FOR REPAIR	ALARM LEVEL (HIGH = SYSTEM CHANGEOVER)
A01	Glycol sensor short	The sensor or the wire to the sensor is shorted.	If there has not been an alarm for 60 minutes, then the alarm is cleared by the controller. Or by C/F key.	Replace sensor. Check wire for damage.	High
A02	Glycol sensor open	The sensor or the wire to the sensor is open.	If there has not been an alarm for 60 minutes, then the alarm is cleared by the controller. Or by C/F key.	Replace sensor. Check wire for damage.	High
A03	Cargo sensor short	The sensor or the wire to the sensor is shorted.	If there has not been an alarm for 60 minutes, then the alarm is cleared by the controller. Or by C/F key.	Replace sensor Check wire for damage.	High
A04	Cargo sensor open	The sensor or the wire to the sensor is shorted.	If there has not been an alarm for 60 minutes, then the alarm is cleared by the controller. Or by C/F key.	Replace sensor Check wire for damage.	High
A05	Heater sensor short	The sensor or the wire to the sensor is shorted.	If there has not been an alarm for 60 minutes, then the alarm is cleared by the controller. Or by C/F key.	Replace sensor Check wire for damage.	High
A06	Heater sensor open	The sensor or the wire to the sensor is open.	No action.	Replace sensor Check wire for damage.	High
A11	Phase sensor fail	The sensor cannot find the 3 phase at the main power. (Test is performed at unit start up)	If the sensor passes a new test, then the alarm is cleared by the controller. Or by C/F key.	Check Main power Check glycol pump. Check CT sensor. Check wire for damage.	High

A12	Low current on heat element	The heat element is using too little power. (Test is performed at unit start up)	The alarm is cleared by display C/F key	Check if relay is switched on. Check output from controller.	Low
A13	High current on heat element	The heat element is using too much power. (Test is performed at unit start up)	The alarm is cleared by display C/F key	Check if relay is switched on. Check output from controller.	Low
A14	Low current on pump motor	The pump motor is using too little power. (Test is performed at unit start up)	The alarm is cleared by display C/F key	Check if relay is switched on. Check output from controller.	Low
A15	High current on pump motor	The pump motor is using too much power. (Test is performed at unit start up)	The alarm is cleared by display C/F key	Check amperage at pump motor. Check if pump is rotating.	Low
A20	Different current on heat element	There is a difference between the phases. (Test is performed at unit start up)	The alarm is cleared by display C/F key	Check if relay is missing a phase. Check if voltage is too low. Check the motor element for defect with a clamp ammeter	Low
A21	Different current on pump motor	There is a difference between the phases. (Test is performed at unit start up)	The alarm is cleared by display C/F key	Check if relay is missing a phase. Check if voltage is too low. Check the motor element for defect with a clamp ammeter	Low
A28	Float switch failure	The float switch has been activated	If there has not been an alarm for 60 minutes, then the alarm is cleared by the controller. Or by C/F key.	Check glycol level, it is most likely low and needs to be topped off.	High

A29	Temperature sensor difference too large under test.	Difference between the temperature sensors is too large. (Test is performed at unit function test)	The alarm is cleared by display C/F key	Check sensors for correct reading.	Low
A30	Container temperature too low	If the rate of temperature change is too slow, less than 0.06 °C / hour, (i.e. Not heating fast enough) and the cargo probe temperature is outside of a 2°C window of the set point there is an alarm. OR if the cargo probe temperature has been inside a 2 °C window of set point at some time since power up or since the set point was changed, and if the glycol temperature is outside a 2°C window of set point for 2 hours or more, there is an alarm.	If the return air is inside the 2°C window of the set point, then the alarm is cleared by the controller. Or by C/F key.	Check sensors for correct reading. If unit is equipped for heat, ensure heater is functioning properly.	High
A35	Temperature Fault	These conditions will produce an open at terminal 31. If terminal 31 has been open in 60 minutes, then the alarm is set.	The alarm is clear by display C/F key	Check setting of temperature alarm recorder. Check glycol pump motor.	High
A41***	Set point different Sys 1/Sys 2	If the systems have set points 1°C or greater difference, the alarm is set.	The alarm is cleared when system set points are made less than 1°C different.	Check both system set points, and make equal.	Low
A42***	No response from other unit	If a signal is not received between the 2 systems for a time of 3 minutes the alarm is set.	The alarm is cleared when a signal is received between both systems.	Check connection of Can Bus cable.	Low
A43	Heat element temperature too high	Heater core probe has exceeded its safety limit.	The alarm is clear by display C/F key	Ensure proper glycol level in system.	Low

A49	Set point missing.	If set point is not loaded in controller, then the display will show -45	The alarm is clear by putting set point in controller.	This is normally if new software is uploaded to the controller.	High

*** Alarm codes A41 and A42 will only be applicable when 2 TCH's are assembled to one container, as a redundant system.

- Low-Level A Low-Level Alarm will give the Alarm Number on the Touch Pad. The alarm lamp will light. The horn will not sound.

- High-Level A High-Level Alarm will give the Alarm Number on the Touch Pad. The alarm lamp will light, and the horn will sound. If the container is equipped with two TCR-109 units as a dual system, the control logic will automatically switch operation to the backup system.

SECTION FIVE - INSPECTION & REPAIR

5.1 Heater

In the case of immersion heater failure, there are no repair procedures, the heater must be replaced in full.

5.2 Glycol Pump Motor and Seal

These procedures are the same to replace the pump motor or the pump seal
The glycol connections will need to be removed for servicing the motor or the pump. The pump suction has a 1-1/4" NPT pipe connection, which is usually removed by breaking the pipe connection at the plastic sight glass. The pump discharge has a 1" NPT pipe connection. Care should be taken when removing the insulation. This insulation will need to be replaced after service.

The motor and power cord connections are sealed with a watertight potting compound, no adjustments can be made here. **Caution:** Do not cut the cable short.

Attach the power cable and check for rotation. The rotation is clockwise, viewing the pump from the fan end.

Regardless of the orientation, note the rotation follows the conch shaped spiral formed by the casting out from the center to the outlet pipe.

CAUTION: Be sure to follow all applicable safety precautions when performing maintenance on this 3-phase machinery.
Ensure that proper personal protective equipment is in place and in use before beginning this installation. Ensure that lifting equipment, slings and ropes etc. are adequately sized and proof tested.

Notes:

The TCH units may be installed in a number of configurations.
Each may have optional items and differing external details provided by third parties.
The unit and the electrical box have serial plates. Quoting either of these with an order for a particular part will allow Klinge to check the "as-built" list to identify a particular original equipment optional item.

Most pipe work parts are standard commercially available pipe fittings. Replace like for like, taking care to replace stainless steel with stainless steel.
Expansion tank (Atmospheric Pressure type) - All systems require an external expansion tank. This is usually supplied by the tank manufacturer and can be either locally fabricated or is a thermoplastic automotive component.

ORDERING PARTS
Parts may be obtained online by emailing:spares@klingecorp.com

Road Tanker
and
ISO Tank Container Heating Unit

6.1 Heating Unit

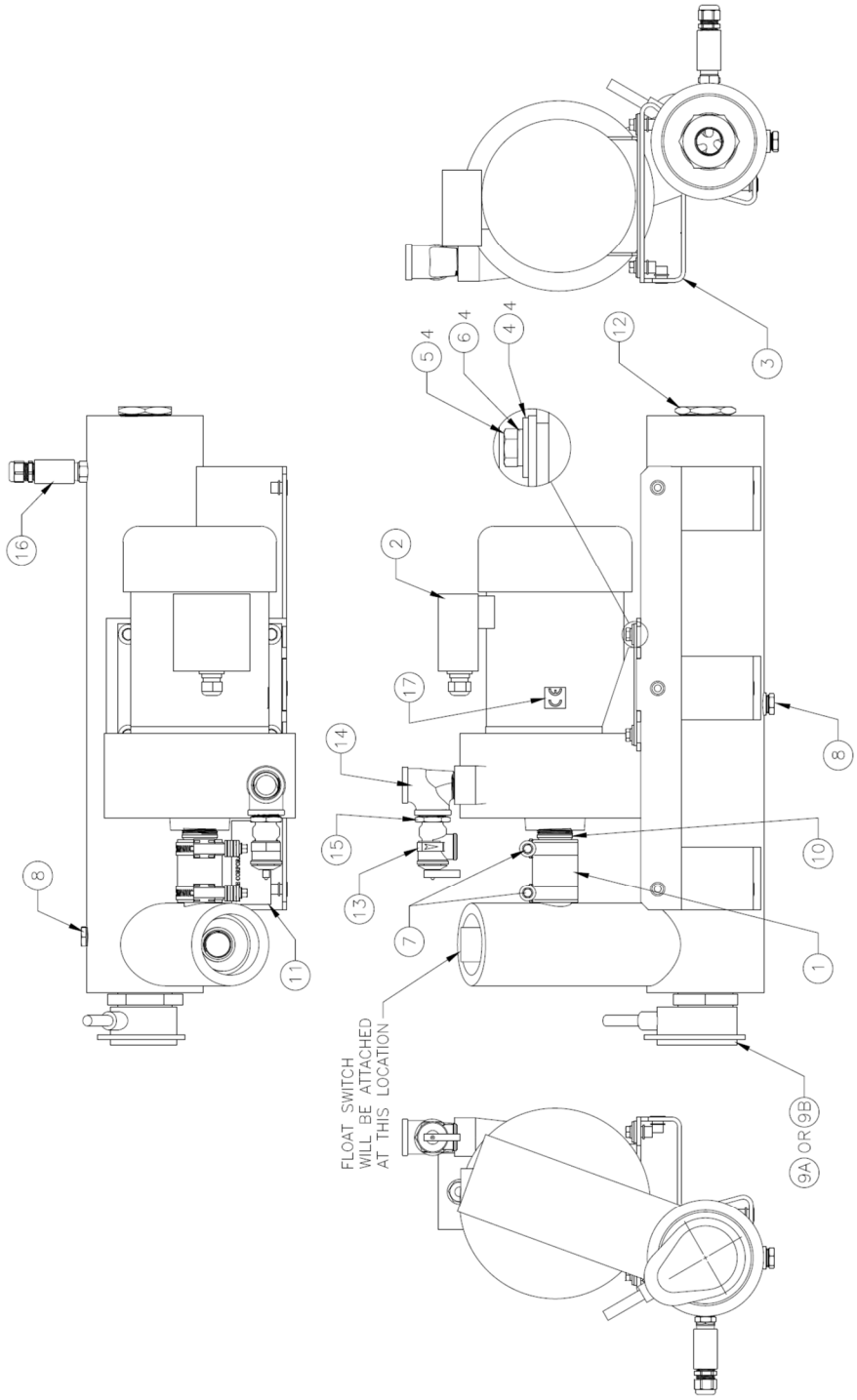

SECTION 6.1
HEATING UNIT

HEATING UNIT			
ITEM	**PART NO.**	**DESCRIPTION**	**QTY**
1	K28-11145-12	HOSE SILICONE RUBBER 1-1/2 OD 3” LG	1
2	360 12208 04	PUMP MODIFICATION ½ HP	1
3	360 18185 00	FRAME PUMP HEATER INSULATED	1
4	K21 16547 08	WASHER FLAT SS M8 LARGE OD 24MM	4
5	K21 50225 25	SCREW HEX SS M8 X 1.25 X 25	4
6	K21 50421 08	WASHER LOCK SS M8	4
7	K21 16379 07	CLAMP HOSE SS 1-1/4 – 2-1/8 ID	2
8	K23 13069 04	PLUG PIPE BRASS ½” MPT	2
9A	K25 26356 06	HEATER IMMERSION 6KW 3PH 2” MPT	1
9B	K25-26356-12	HEATER IMMERSION 12KW 3PH 2” MPT	1
10	060 12812 00	CONNECTION PUMP 1-1/4 MPT X 2-1/4 LG	1
11	060 13621 00	LABEL DATA PLATE TCH UNITS	1
12	K23 13260 15	BUSHING PIPE HEX SS 2” MPT X 1” FPT	1
13	K25 26854 00	VALVE SAFETY RELIEF 30 PSI ¾ FPT X ¾ MPT	1
14	K23 13398 00	TEE 1 MPT X 1 FPT X 1 FPT	1
15	K23 13399 00	BUSHING REDUCER 1 MPT X ¾ FPT	1
16	360 17717 00	CABLE TEMPERATURE SWITCH TCH	1
17	K35 06541 00	LABEL CE EUROPEAN UNION APPROVAL	1
OPTIONAL (NOT SHOWN)			
	360-18224-00	COVER TCH-006/012 TANK HEATER	1

6.2 Electrical Box

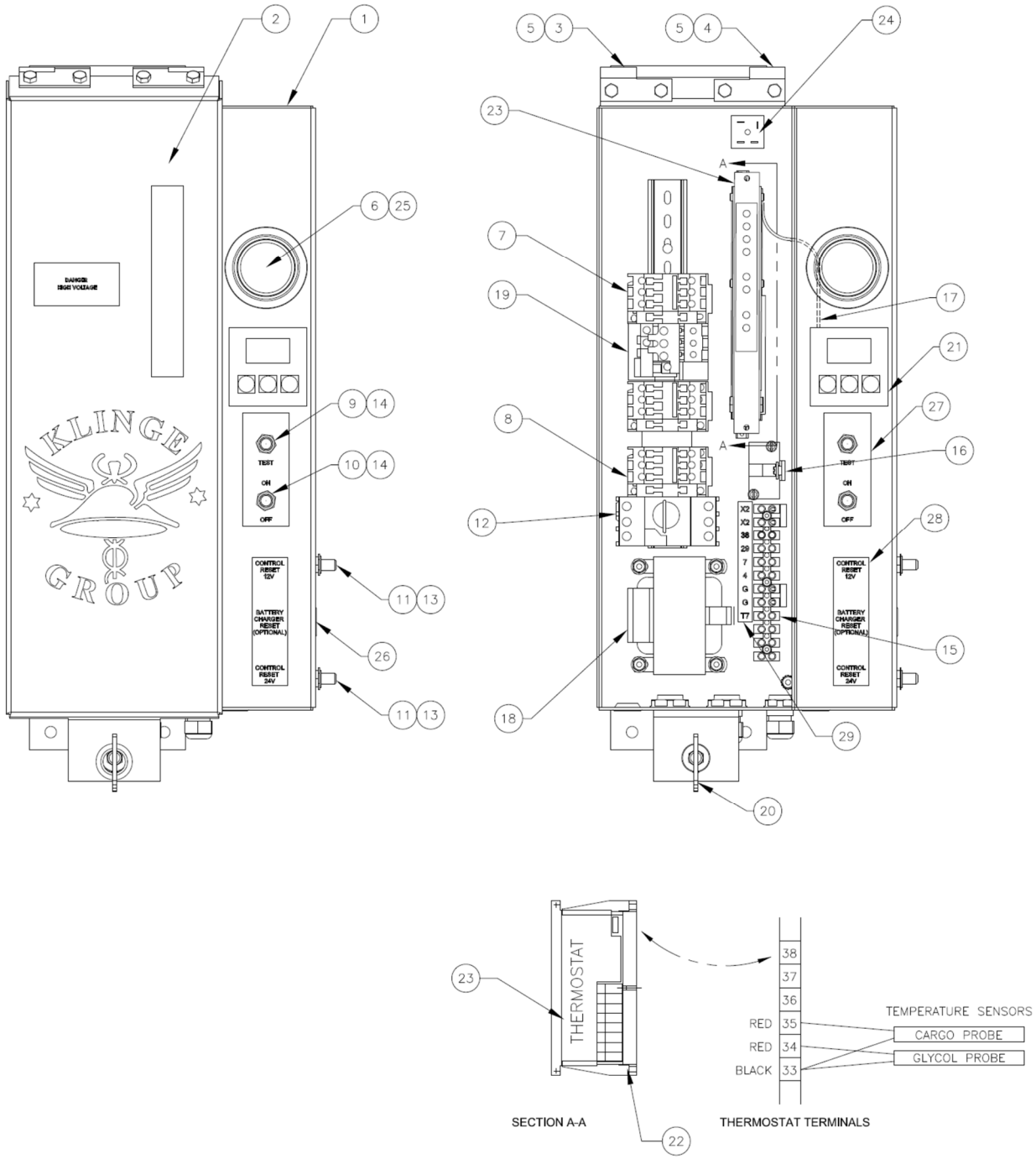

SECTION 6.2
ELECTRICAL BOX

CONTROL BOX			
ITEM	**PART NO.**	**DESCRIPTION**	**QTY**
1	460 17979 00	BOX ELEC COMPLETE	1
2	360 17982 00	DOOR ELEC BOX SMALL TCH	1
3	K29 17879 01	HINGE SLIP SS 9/32 HOLES SOCK RIGHT HAND	1
4	K29 17880 01	HINGE SLIP SS 9/32 HOLES SOCK LEFT HAND	1
5	060 09113 00	INSULATOR HINGE	2
6	360 17648 00	LAMP ALARM ASSY TCR/TRS SMALL	1
7	K24 22156 00	CONTACTOR 16A 3P 24V 60/50 HZ	1
8	K24 22148 00	CONTACTOR REVERSING 9A 6P 24V	1
9	K24 22152 00	SWITCH TOGGLE SPDT MOM *ON-OFF-ON	1
10	K24 22144 00	SWITCH TOGGLE 3PST ON-OFF #6 SCR	1
11	K24 22330 00	CIRCUIT BREAKER 4A 1P ¼ PO PANEL MT	1
12	K24 22363 13	CIRCUIT BREAKER IEC 3 POLE 19-13A	1
13	K24 18164 00	BOOT CIRCUIT BREAKER 3/8-27 THD ACCORD	2
14	K24 17239 00	BOOT TOGGLE SW	2
15	K25 26488 12	BLOCK TERMINAL 12P 45A	1
16	360 16398 00	CURRENT SENSING TRANS 20A 3PH VERTICAL	1
17	360 12540 05	CABLE RIBBON SHLD 10 WIRES 13 LG	1
18	K25 26624 10	TRANSFORMER 230 VA 400V 24/14V	
19	K24 22268 00	RELAY OVERLOAD 3P 1.8-2.8 BASE	1
20	K21 16313 00	FASTENER BABY ANTILUSE M8 X 1.25	1
21	K31 00811 00	DISPLAY TEMP W/SELECTOR F/C	1
22	360 10829 00	BASE THERMOSTAT	1
23	K31 00948 12	THERMOSTAT TCH-112 LABELED	1
24	360 17646 00	RECTIFIER BRIDGE 1 PH 25A 200V MTG TAPE 1”	1
25	K28 11107 00	GROMMET LED BLACK	1
26	K28 10936 03	PLUG SEAL POLY FLUSH	1
27	K35-05995-12	LABEL GLYCOL TEMP/TEST AND ON/OFF	1
28	K35-06545-01	LABEL CONTROL RESET AND BAT CHARGER	1
29	K35-06682-00	LABEL TERM BLOCK ELEC BOX TCH SMALL	1

6.3 Electrical Box Door

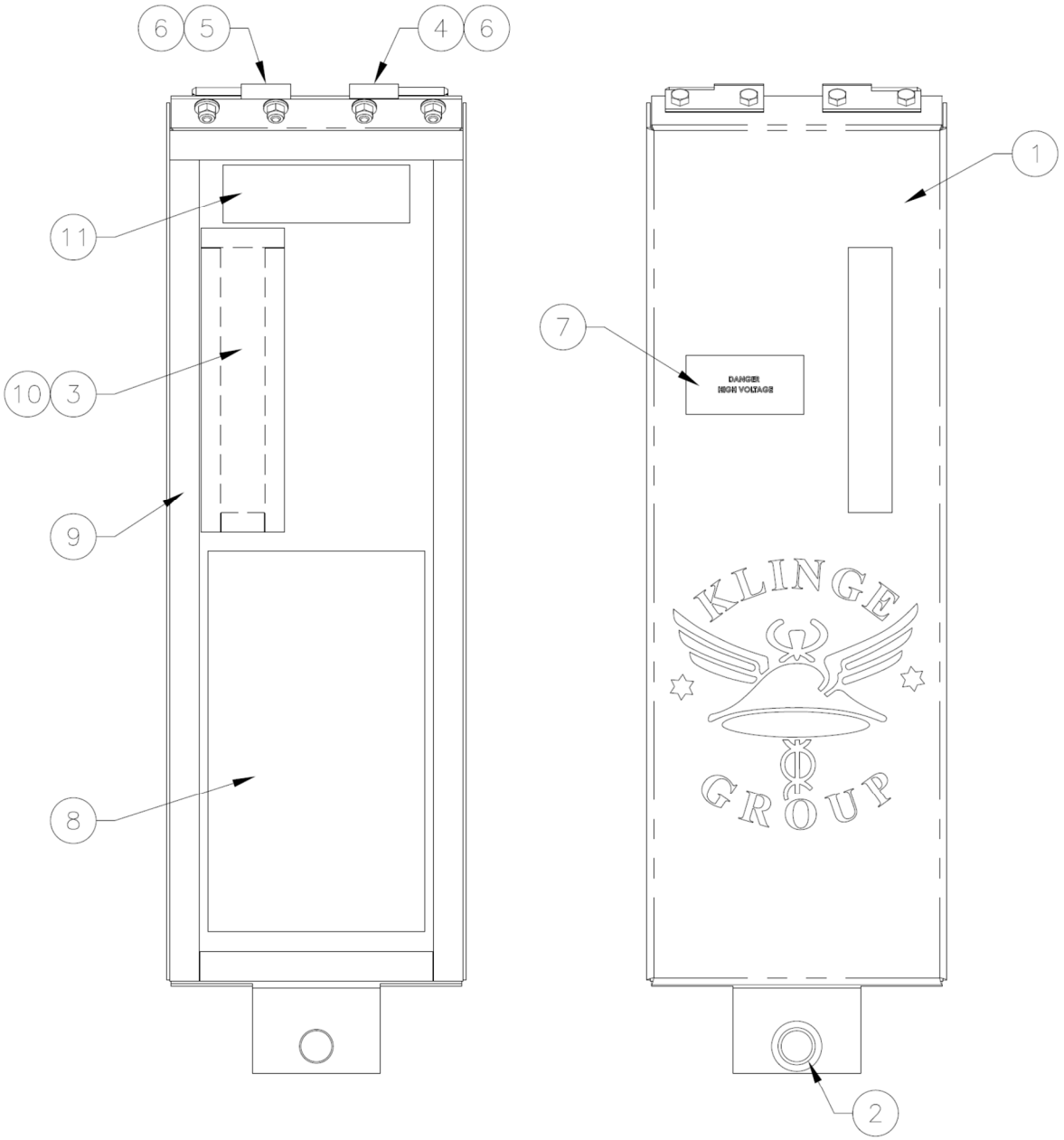

SECTION 6.3
DOOR ELECTRICAL CONTROL BOX
DUAL PROBES

CONTROL BOX DOOR			
ITEM	**PART NO.**	**DESCRIPTION**	**QTY**
1	360 17630 01	DOOR ELEC BOX SMALL PAINTED WHITE	1
2	K28 10847 04	GROMMET INSERT .875 HOLE SIZE	1
3	K28 10945 05	WINDOW DOOR ELEC CONTROL BOX SMALL	1
4	K29 17879 02	HINGE SLIP SS 9/32 HOLES W/PIN RIGHT HAND	1
5	K29 17880 02	HINGE SLIP SS 9/32 HOLES W/PIN LEFT HAND	1
6	060 09113 00	HINGE INSULATOR	2
7	K35 05899 00	LABEL DANGER HIGH VOLTAGE	1
8	K35 06006 26	LABEL ELEC SCHEMATIC	1
9	K28 10866 01	STRIP SPONGE 3/8 X 3/4 W/ADHESIVE	4.63FT
10	K13 02951 01	TAPE 3M VHB 1/2 WIDE	1.5FT
11	K35 06209 00	LABEL KLINGE CORP FOR TECHINICAL ASSIST	1

6.4 Low Liquid Level Control

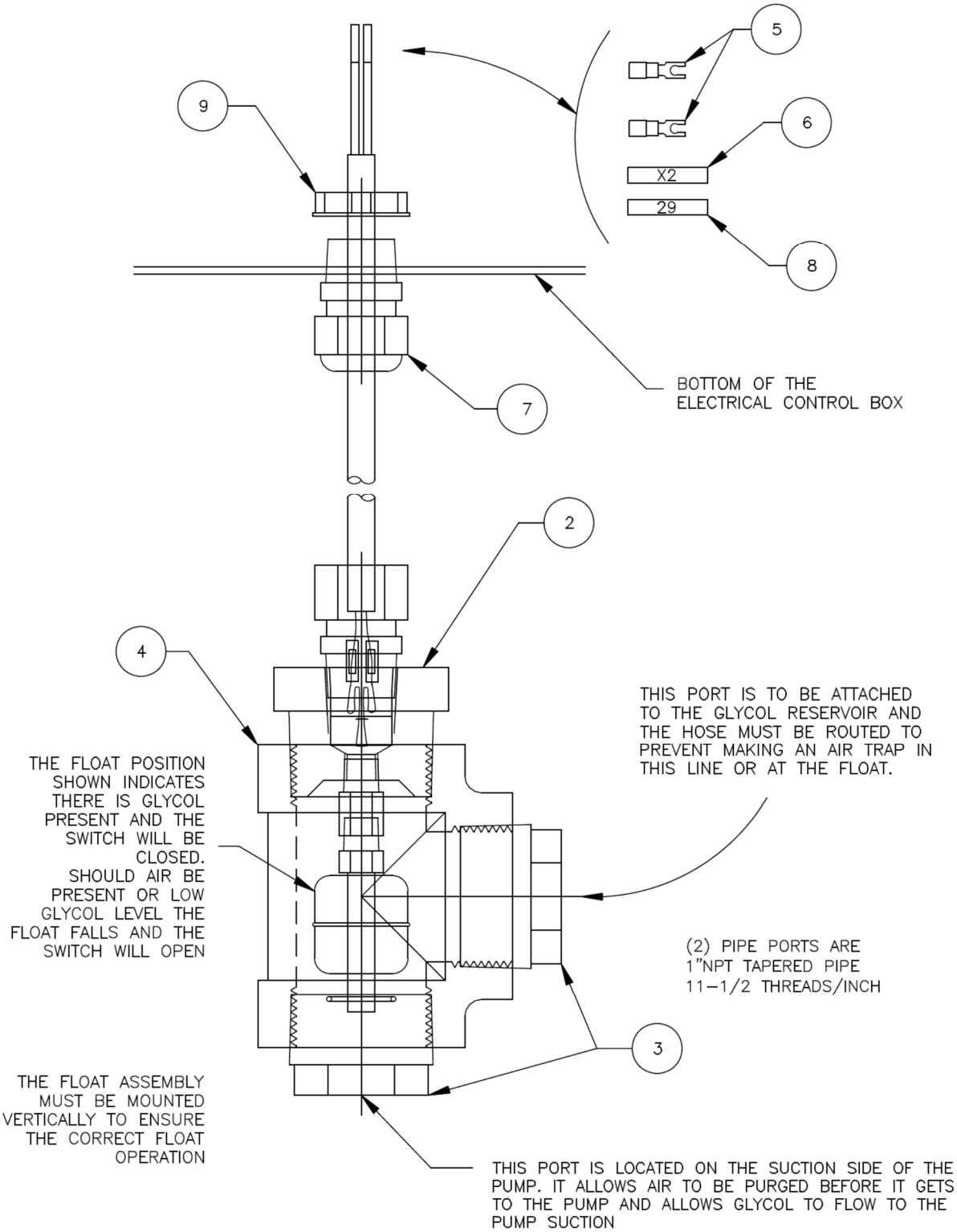

SECTION 6.4

CONTROL LOW LIQUID LEVEL

CONTROL LOW LIQUID LEVEL			
ITEM	**PART NO.**	**DESCRIPTION**	**QTY**
1	360 13620 00	CONTROL LOW LIQUID LEVEL TEE 1” FPT	1
		(INCLUDES ITEMS 2 THRU 9)	
2	360 13619 00	CONTROL LOW LIQUID LEVEL ASSEMBLY	1
3	K23 13042 14	BUSHING PIPE HEX BRASS 1-1/4 MPT X 1	2
4	K23 13280 07	TEE ALUMINUM 150# SCHEDULE 40 1-1/4 FPT	1
5	K25 18731 00	TERMINAL SPRING SPADE 6 (16-14) INS BLUE	2
6	K25 22841 17	MARKER WIRE .19 ID X2	1
7	K25 26129 03	CONNECTOR STRAIGHT PLASTIC SHORT ½	1
8	K25 26197 29	MARKER WIRE .19 ID #29	1
9	K25 26340 02	NUT LOCK CONDUIT BLACK NYLON ½ NPR	1

6.5a Standard Expansion Tank

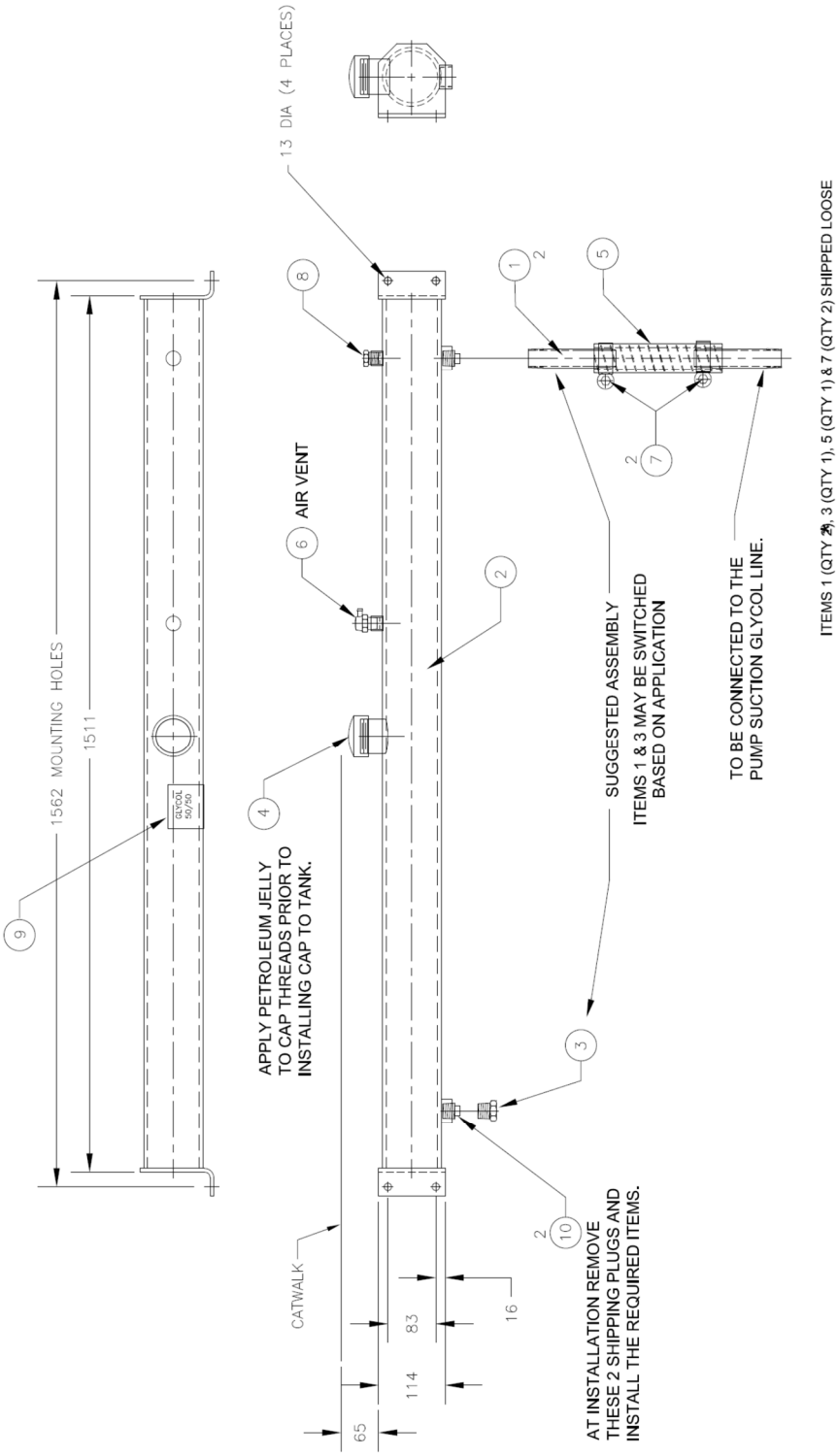

SECTION 6.5a
STANDARD EXPANSION TANK

EXPANSION TANK			
ITEM	**PART NO.**	**DESCRIPTION**	**QTY**
1	060-13197-00	CONNECTION GLYCOL 1” NPT X 6”	2
2	360-13216-00	TANK GLYCOL WELDMENT	1
3	K23-13258-06	PLUG PIPE 1” STAINLESS STEEL	1
4	K26-24792-01	CAP FUEL 2” NPS W/8” CHAIN	1
5	060-13283-01	TUBE PVC SPIRAL REINF	1
6	K26-24768-00	VANT BALL CHECK ½ MPT	1
7	K21-16379-05	CLAMP HOSE CONSTANT TORQUE	2
8	K23-13069-04	PLUG PIPE HEX BRS ½ MPT	1
9	K35-06012-00	LABEL GLYCOL 50/50	1
10	K28-10799-06	PLUG PIPE Q HD PLST 1” NPT	2

6.5b Plastic Expansion Tank (option)

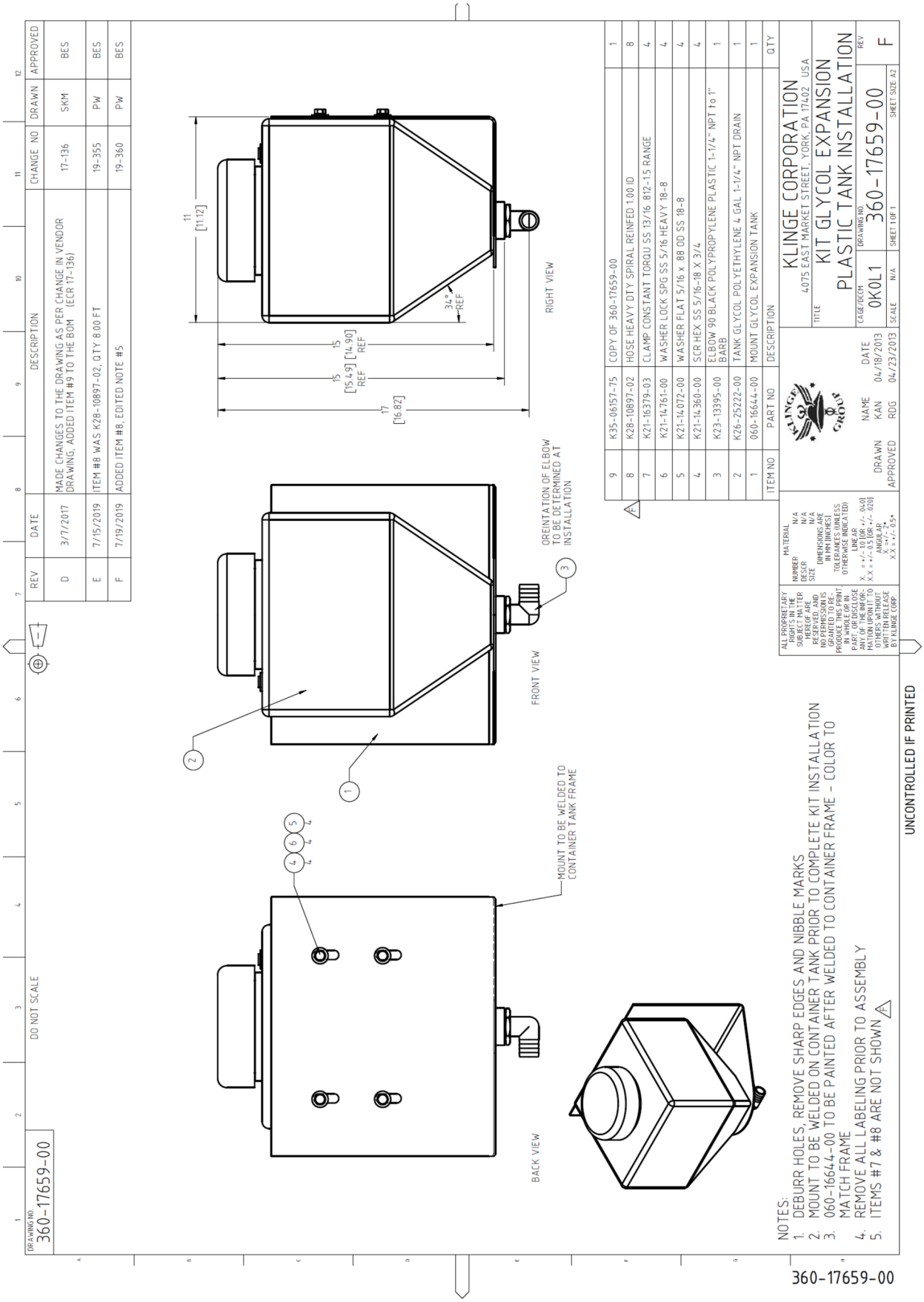

6.6 Safety Limit Chart

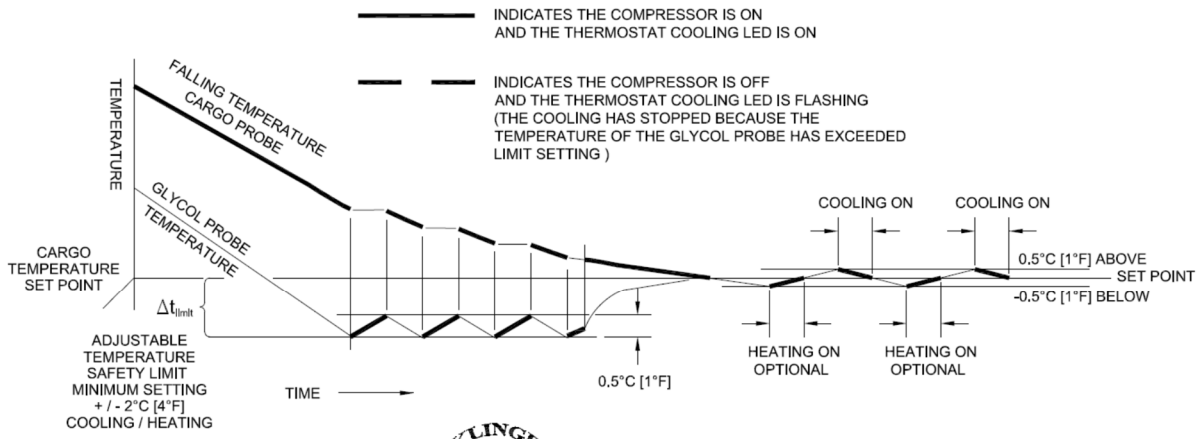

CHART IS SHOWN COOLING
HEATING IS OPPOSITE
THE CHART SHOWS THE RELATIONSHIP BETWEEN SET POINT, LIMIT AND WHICH PROBE (CARGO OR GLYCOL) IS CONTROLLING THE UNIT COOLING OR HEATING

NOTE
IF THE CARGO PROBE FAILS THE GLYCOL PROBE WILL CONTROL THE UNIT

GLYCOL SAFETY LIMIT SETTING

1- THIS IS AN ADJUSTABLE TEMPERATURE LIMIT TO PREVENT THE GLYCOL FROM SUB-COOLING THE CARGO. IT SENSES THE DIFFERENCE FROM THE SET POINT TO THE TEMPERATURE SENSED BY THE GLYCOL PROBE.

2 - WHEN THE TEMPERATURE DIFFERENCE IS GREATER THAN THE SAFETY LIMIT THE COOLING OR HEAT WILL SHUT DOWN AND THE THERMOSTAT COOLING OR HEAT LED WILL FLASH.

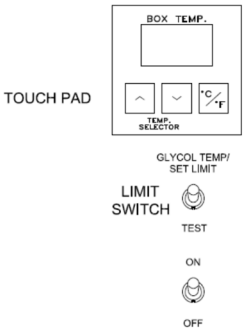

TOUCH PAD and LIMIT SWITCH

1 - Touch pad shows actual cargo temperature.

2 - Push ∧ or ∨ keys on touch pad to see cargo temperature set point.

3 - To see glycol temperature hold the limit switch up.

4 - To see the Δt limit hold the limit switch up & press ∧ or ∨ (minimum setting + / - 2°C [4°F]

5 - To reset Δt hold the limit switch up and press ∧ or ∨ keys then to set the limit simultaneously hold ∧ and ∨ for 2 seconds.

THERMOSTAT EDGE LED			THERMOSTAT DESCRIPTION WHEN LED IS ON
#	LABEL	LED	
1	ON	ON	12 VOLT POWER TO THE THERMOSTAT
2	ALARM ON	ON	AN ALARM IS PRESENT SEE 6, 7, 8, 9, OR 10
3	PRIMARY SYS	ON	USED FOR DUAL SYSTEMS ONLY ALWAYS ON WITH A SINGLE UNIT
4	COOLING	ON	THERMOSTAT IS CALLING FOR COOLING
		FLASHING	COMPRESSOR OFF (GLYCOL TEMPERATURE PROBE IS COLDER THAN THE SAFETY LIMIT SETTING)
5	HEAT OPTIONAL	ON	THERMOSTAT IS CALLING FOR HEAT
		FLASHING	HEAT OFF (GLYCOL TEMPERATURE PROBE IS WARMER THAN THE LIMIT SETTING)
6	CARGO	ON	CARGO PROBE IS CONTROLLING
		FLASHING	CARGO PROBE BAD (CONTROLLING ON GLYCOL PROBE)
7	GLYCOL	ON	GLYCOL PROBE IS CONTROLLING
		FLASHING	GLYCOL PROBE BAD (CONTROLLING ON CARGO PROBE)
8	TEMP FAIL	ON	1- PULL DOWN RATE IS LESS THAN 0.05°C [0.1°F] / HOUR 2- EXTERNAL TEMPERATURE FAULT SEE DATA LOGGER (WHEN USED)
9	HI PRESS	ON	COMPRESSOR HIGH PRESSURE SWITCH OPEN
10	MOTOR FAIL	ON	ONE (1) OR MORE OF THREE (3) MOTOR OVERLOADS HAS A FAULT

K35-06118-05 REV C GLYCOL SAFETY LIMIT CHART 7/02/10 USE WITH THERMOSTATS K31-00858-10,-20,-30 AND K31-00878-10,-20,-30

LIMIT CHART
SHOWING THE OPERATION OF
CARGO AND GLYCOL PROBES